GE Medical Systems

gehealthcare.com

Technical Publication

Direction 2296444-100
Revision 03

GE Medical Systems
LightSpeed 3.X Functional Interconnects

The information in this service manual applies to the following LightSpeed 3.X CT systems:

– LightSpeed Ultra (8-slice, MDAS)

– LightSpeed Plus (4-slice, MDAS)

– LightSpeed QX/i (4-slice, MDAS)

ADVANCED SERVICE DOCUMENTATION
PROPERTY OF GE
FOR GE SERVICE PERSONNEL ONLY
NO RIGHTS LICENSED
DO NOT USE OR COPY
DISCLOSURE TO THIRD PARTIES PROHIBITED

Copyright © 2001-2005 by General Electric Company.
All rights reserved.

PROPRIETARY TO GE MEDICAL SYSTEMS

Permission to use this Advanced Service Software and related documentation (herein called the material) by persons other than GE Medical Systems employees is provided only under an Advanced Service Package License relating specifically to this Proprietary Material. This is a different agreement from the one under which operating and basic service software is lessened. A license to use operating or basic service software does not extend to or cover this software or related documentation.

If you are a GE Medical Systems employee or a customer who has entered into such a license agreement with GE Medical Systems to use this proprietary software, you are authorized to use this Material according to the conditions stated in your license agreement. However, you do not have the permission of GE Medical Systems to alter, decompose or reverse-assemble the software, and unless you are a GE employee, you may not copy the Material. The Material is protected by Copyright and Trade Secret laws; the violation of which can result in civil damages and criminal prosecution.

If you are not party to such a license agreement or a GE Medical Systems Employee, you must exit this Material now.

IMPORTANT PRECAUTIONS

LANGUAGE

WARNING

- THIS SERVICE MANUAL IS AVAILABLE IN ENGLISH ONLY.
- IF A CUSTOMER'S SERVICE PROVIDER REQUIRES A LANGUAGE OTHER THAN ENGLISH, IT IS THE CUSTOMER'S RESPONSIBILITY TO PROVIDE TRANSLATION SERVICES.
- DO NOT ATTEMPT TO SERVICE THE EQUIPMENT UNLESS THIS SERVICE MANUAL HAS BEEN CONSULTED AND IS UNDERSTOOD.
- FAILURE TO HEED THIS WARNING MAY RESULT IN INJURY TO THE SERVICE PROVIDER, OPERATOR OR PATIENT FROM ELECTRIC SHOCK, MECHANICAL OR OTHER HAZARDS.

AVERTISSEMENT

- CE MANUEL DE MAINTENANCE N'EST DISPONIBLE QU'EN ANGLAIS.
- SI LE TECHNICIEN DU CLIENT A BESOIN DE CE MANUEL DANS UNE AUTRE LANGUE QUE L'ANGLAIS, C'EST AU CLIENT QU'IL INCOMBE DE LE FAIRE TRADUIRE.
- NE PAS TENTER D'INTERVENTION SUR LES ÉQUIPEMENTS TANT QUE LE MANUEL SERVICE N'A PAS ÉTÉ CONSULTÉ ET COMPRIS.
- LE NON-RESPECT DE CET AVERTISSEMENT PEUT ENTRAÎNER CHEZ LE TECHNICIEN, L'OPÉRATEUR OU LE PATIENT DES BLESSURES DUES À DES DANGERS ÉLECTRIQUES, MÉCANIQUES OU AUTRES.

WARNUNG

- DIESES KUNDENDIENST-HANDBUCH EXISTIERT NUR IN ENGLISCHER SPRACHE.
- FALLS EIN FREMDER KUNDENDIENST EINE ANDERE SPRACHE BENÖTIGT, IST ES AUFGABE DES KUNDEN FÜR EINE ENTSPRECHENDE ÜBERSETZUNG ZU SORGEN.
- VERSUCHEN SIE NICHT, DAS GERÄT ZU REPARIEREN, BEVOR DIESES KUNDENDIENST-HANDBUCH ZU RATE GEZOGEN UND VERSTANDEN WURDE.
- WIRD DIESE WARNUNG NICHT BEACHTET, SO KANN ES ZU VERLETZUNGEN DES KUNDENDIENSTTECHNIKERS, DES BEDIENERS ODER DES PATIENTEN DURCH ELEKTRISCHE SCHLÄGE, MECHANISCHE ODER SONSTIGE GEFAHREN KOMMEN.

AVISO

- ESTE MANUAL DE SERVICIO SÓLO EXISTE EN INGLÉS.
- SI ALGÚN PROVEEDOR DE SERVICIOS AJENO A GEMS SOLICITA UN IDIOMA QUE NO SEA EL INGLÉS, ES RESPONSABILIDAD DEL CLIENTE OFRECER UN SERVICIO DE TRADUCCIÓN.
- NO SE DEBERÁ DAR SERVICIO TÉCNICO AL EQUIPO, SIN HABER CONSULTADO Y COMPRENDIDO ESTE MANUAL DE SERVICIO.
- LA NO OBSERVANCIA DEL PRESENTE AVISO PUEDE DAR LUGAR A QUE EL PROVEEDOR DE SERVICIOS, EL OPERADOR O EL PACIENTE SUFRAN LESIONES PROVOCADAS POR CAUSAS ELÉCTRICAS, MECÁNICAS O DE OTRA NATURALEZA.

ATENÇÃO

- ESTE MANUAL DE ASSISTÊNCIA TÉCNICA SÓ SE ENCONTRA DISPONÍVEL EM INGLÊS.
- SE QUALQUER OUTRO SERVIÇO DE ASSISTÊNCIA TÉCNICA, QUE NÃO A GEMS, SOLICITAR ESTES MANUAIS NOUTRO IDIOMA, É DA RESPONSABILIDADE DO CLIENTE FORNECER OS SERVIÇOS DE TRADUÇÃO.
- NÃO TENTE REPARAR O EQUIPAMENTO SEM TER CONSULTADO E COMPREENDIDO ESTE MANUAL DE ASSISTÊNCIA TÉCNICA.
- O NÃO CUMPRIMENTO DESTE AVISO PODE POR EM PERIGO A SEGURANÇA DO TÉCNICO, OPERADOR OU PACIENTE DEVIDO A' CHOQUES ELÉTRICOS, MECÂNICOS OU OUTROS.

AVVERTENZA

- IL PRESENTE MANUALE DI MANUTENZIONE È DISPONIBILE SOLTANTO IN INGLESE.
- SE UN ADDETTO ALLA MANUTENZIONE ESTERNO ALLA GEMS RICHIEDE IL MANUALE IN UNA LINGUA DIVERSA, IL CLIENTE È TENUTO A PROVVEDERE DIRETTAMENTE ALLA TRADUZIONE.
- SI PROCEDA ALLA MANUTENZIONE DELL'APPARECCHIATURA SOLO DOPO AVER CONSULTATO IL PRESENTE MANUALE ED AVERNE COMPRESO IL CONTENUTO.
- NON TENERE CONTO DELLA PRESENTE AVVERTENZA POTREBBE FAR COMPIERE OPERAZIONI DA CUI DERIVINO LESIONI ALL'ADDETTO ALLA MANUTENZIONE, ALL'UTILIZZATORE ED AL PAZIENTE PER FOLGORAZIONE ELETTRICA, PER URTI MECCANICI OD ALTRI RISCHI.

警告

このサービスマニュアルには英語版しかありません。
ＧＥＭＳ以外でサービスを担当される業者が英語以外の言語を要求される場合、翻訳作業はその業者の責任で行うものとさせていただきます。
このサービスマニュアルを熟読し理解せずに、装置のサービスを行わないで下さい。
この警告に従わない場合、サービスを担当される方、操作員あるいは患者さんが、感電や機械的又はその他の危険により負傷する可能性があります。

注意:

本维修手册仅存有英文本。
非 GEMS 公司的维修员要求非英文本的维修手册时，客户需自行负责翻译。
未详细阅读和完全了解本手册之前，不得进行维修。
忽略本注意事项会对维修员，操作员或病人造成触电，机械伤害或其他伤害。

DAMAGE IN TRANSPORTATION

All packages should be closely examined at time of delivery. If damage is apparent, have notation “damage in shipment” written on all copies of the freight or express bill before delivery is accepted or “signed for” by a General Electric representative or a hospital receiving agent. Whether noted or concealed, damage MUST be reported to the carrier immediately upon discovery, or in any event, within 14 days after receipt, and the contents and containers held for inspection by the carrier. A transportation company will not pay a claim for damage if an inspection is not requested within this 14 day period.

To file a report:

- Call 1-800-548-3366 and use option 8.
- Fill out a report on http://us44hdd21/sctq/InstallFulfill/InstalFulfillment.htm
- Contact your local service coordinator for more information on this process.

Rev. Jan. 5, 2005

CERTIFIED ELECTRICAL CONTRACTOR STATEMENT

All electrical Installations that are preliminary to positioning of the equipment at the site prepared for the equipment shall be performed by licensed electrical contractors. In addition, electrical feeds into the Power Distribution Unit shall be performed by licensed electrical contractors. Other connections between pieces of electrical equipment, calibrations and testing shall be performed by qualified GE Medical personnel. The products involved (and the accompanying electrical installations) are highly sophisticated, and special engineering competence is required. In performing all electrical work on these products, GE will use its own specially trained field engineers. All of GE’s electrical work on these products will comply with the requirements of the applicable electrical codes.

The purchaser of GE equipment shall only utilize qualified personnel (i.e., GE’s field engineers, personnel of third-party service companies with equivalent training, or licensed electricians) to perform electrical servicing on the equipment.

IMPORTANT...X-RAY PROTECTION

X-ray equipment if not properly used may cause injury. Accordingly, the instructions herein contained should be thoroughly read and understood by everyone who will use the equipment before you attempt to place this equipment in operation. The General Electric Company, Medical Systems Group, will be glad to assist and cooperate in placing this equipment in use.

Although this apparatus incorporates a high degree of protection against x-radiation other than the useful beam, no practical design of equipment can provide complete protection. Nor can any practical design compel the operator to take adequate precautions to prevent the possibility of any persons carelessly exposing themselves or others to radiation.

It is important that anyone having anything to do with x-radiation be properly trained and fully acquainted with the recommendations of the National Council on Radiation Protection and Measurements as published in NCRP Reports available from NCRP Publications, 7910 Woodmont Avenue, Room 1016, Bethesda, Maryland 20814, and of the International Commission on Radiation Protection, and take adequate steps to protect against injury.

The equipment is sold with the understanding that the General Electric Company, Medical Systems Group, its agents, and representatives have no responsibility for injury or damage which may result from improper use of the equipment.

Various protective materials and devices are available. It is urged that such materials or devices be used.

LITHIUM BATTERY CAUTIONARY STATEMENTS

CAUTION Risk of Explosion

Danger of explosion if battery is incorrectly replaced. Replace only with the same or equivalent type recommended by the manufacturer. Discard used batteries according to the manufacturer’s instructions.

ATTENTION Danger d’Explosion

Il y a danger d’explosion s’il y a replacement incorrect de la batterie. Remplacer uniquement avec une batterie du même type ou d’un type recommandé par le constructeur. Mettre au rébut les batteries usagées conformément aux instructions du fabricant.

OMISSIONS & ERRORS

Customers, please contact your GE Sales or Service representatives.

GE personnel, please use the GEMS PQR Process to report all omissions, errors, and defects in this publication.

Revision History

Rev	Date	Reason for change
0	11/13/03	Removed information from the LightSpeed 3.X System Service Manual - Advanced, and created a stand-alone manual.
1	12/18/03	CQA 1033884: Added Section 1.0 — Patient Alignment Lights - 2126249, to Chapter 4
2	08/17/04	PQR 13012916: Added Section 5.0 — Table Cradle Drive (Vertical & Longitudinal Drives) - 2123540 to Chapter 4
3	05/10/05	PQR 13024644: Updated drawing 226770SCH, Added drawing 2267713SCH

Table of Contents

Chapter 1
System Communications 7
- Section 1.0 — Gantry Slip Ring Communications - 2267732 8
- Section 2.0 — Rotating Controller Interface Bus (RCIB) - 2305060 9
- Section 3.0 — Final Scan Control / Intercom / AutoVoice - 2151953 10

Chapter 2
X-Ray Generation 13
- Section 1.0 — Rotor Control - 2267317 14
- Section 2.0 — Exposure Enable - 2267735 15
- Section 3.0 — Rotating HVON Sense - 2267736 16
- Section 4.0 — Filament Select and mA Loop - 2267737 17
- Section 5.0 — Tube ID, Cooling and Pressure Sense - 2267738 18
- Section 6.0 — Back-Up Timer - 2267739 19
- Section 7.0 — kV Loop - 2267740 20
- Section 8.0 — BU Contactor / Exposure Interlocks - 2267741 22
- Section 9.0 — X-Ray Collimation and Filtration - 2267744 25
- Section 10.0 — Final Exposure Command - 2267746 26

Chapter 3
Data Acquisition 27
- Section 1.0 — DAS Power Supplies - 2302185 28
- Section 2.0 — Detector Heater Control Board - 2302184 29

Chapter 4
Patient Positioning 31
- Section 1.0 — Patient Alignment Lights - 2126249 32
- Section 2.0 — Table Gantry Sync - 2267745 33
- Section 3.0 — Table Elevation Drive - 2267754 34
- Section 4.0 — Gantry Tilt Function - 2267756 35
- Section 5.0 — Table Cradle Drive (Vertical & Longitudinal Drives) - 2123540 . 36

Chapter 5
Axial Control 39
- Section 1.0 — Axial Servo Control Loop - 2267757 40
- Section 2.0 — Axial Drive Power Control - 2267784 41

Chapter 6
Operator I/O 43
- Section 1.0 — Gantry Operator Interface - 2267760 44
- Section 2.0 — Site X-Ray ON Light - 2267761 45
- Section 3.0 — Site System ON Light 47
- Section 4.0 — RX Tilt & Gantry Console Reset - 2267765 48

Chapter 7
System Monitoring 49
- Section 1.0 — Mains Undervoltage - 2267731 (Not applicable to NGPDU) 50
- Section 2.0 — Gantry Temp. Sensors & Power Supply Monitors - 2267766 51

Chapter 8
System Power Control 53
- Section 1.0 — HVDC Bus Control - 2267769 54
- Section 2.0 — Gantry 120VAC Control - 2267770 57
- Section 3.0 — E-Stop Drives Reset - 2267773 59
- Section 4.0 — Gantry Stationary Power and Ground - 2267713 61

Chapter 9
Image Generation (Global Console - Linux) 65
- Section 1.0 — Scan Data Save 66
- Section 2.0 — Data Restore 67
- Section 3.0 — Pre-Processing, Filtered Back Projection & Post Processing.. 68
- Section 4.0 — Image Transfer 69

Chapter 10
Image Generation (Global Console - Octane2) 71
- Section 1.0 — Scan Data Save 72

Section 2.0 — Data Restore 73
Section 3.0 — Pre-Processing, Filtered Back Projection & Post Processing .. 74
Section 4.0 — Image Transfer 75

Chapter 11
Image Generation (H3 Console) 77
Section 1.0 — Scan Data Save 78
Section 2.0 — Data Restore 79
Section 3.0 — Pre-Processing, Filtered Back Projection & Post Processing .. 80
Section 4.0 — Image Transfer 81

Chapter 1
System Communications

Section 1.0 — Gantry Slip Ring Communications - 2267732

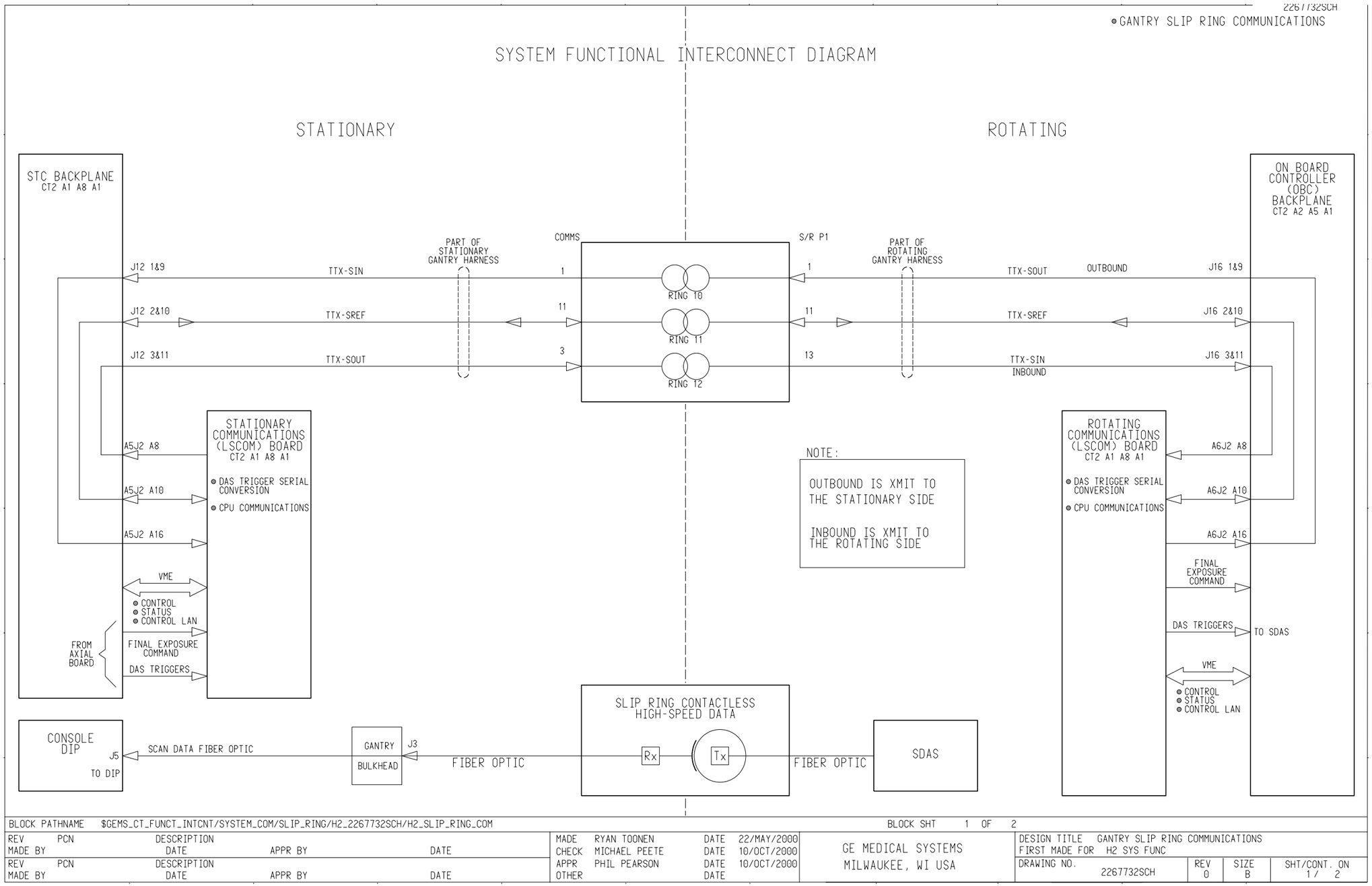

Figure 1-1 2267732 Sheet 1, Rev. 0

Section 2.0 — Rotating Controller Interface Bus (RCIB) - 2305060

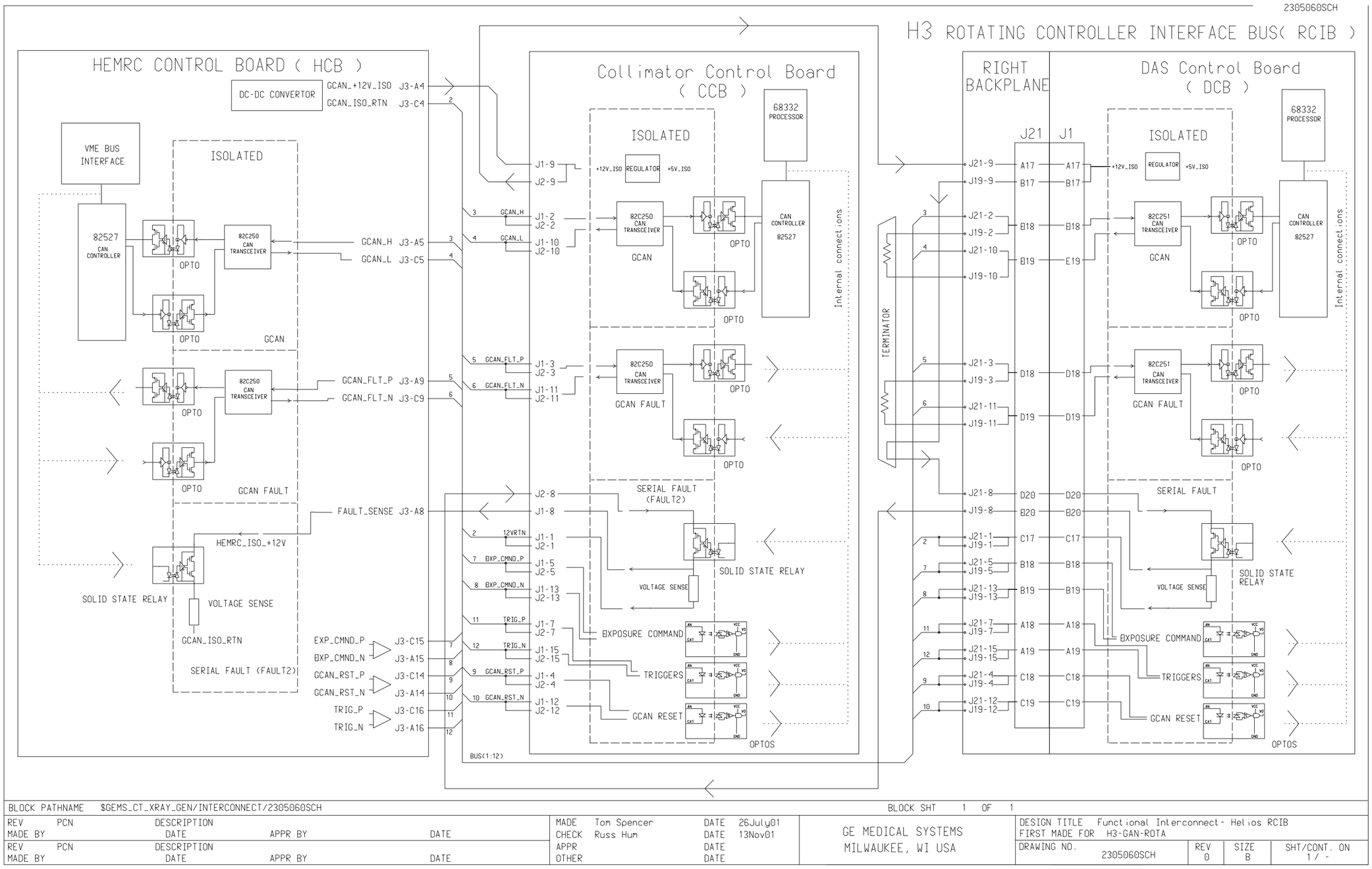

Figure 1-2 2305060 Sheet 1, Rev. 0

Section 3.0 — Final Scan Control / Intercom / AutoVoice - 2151953

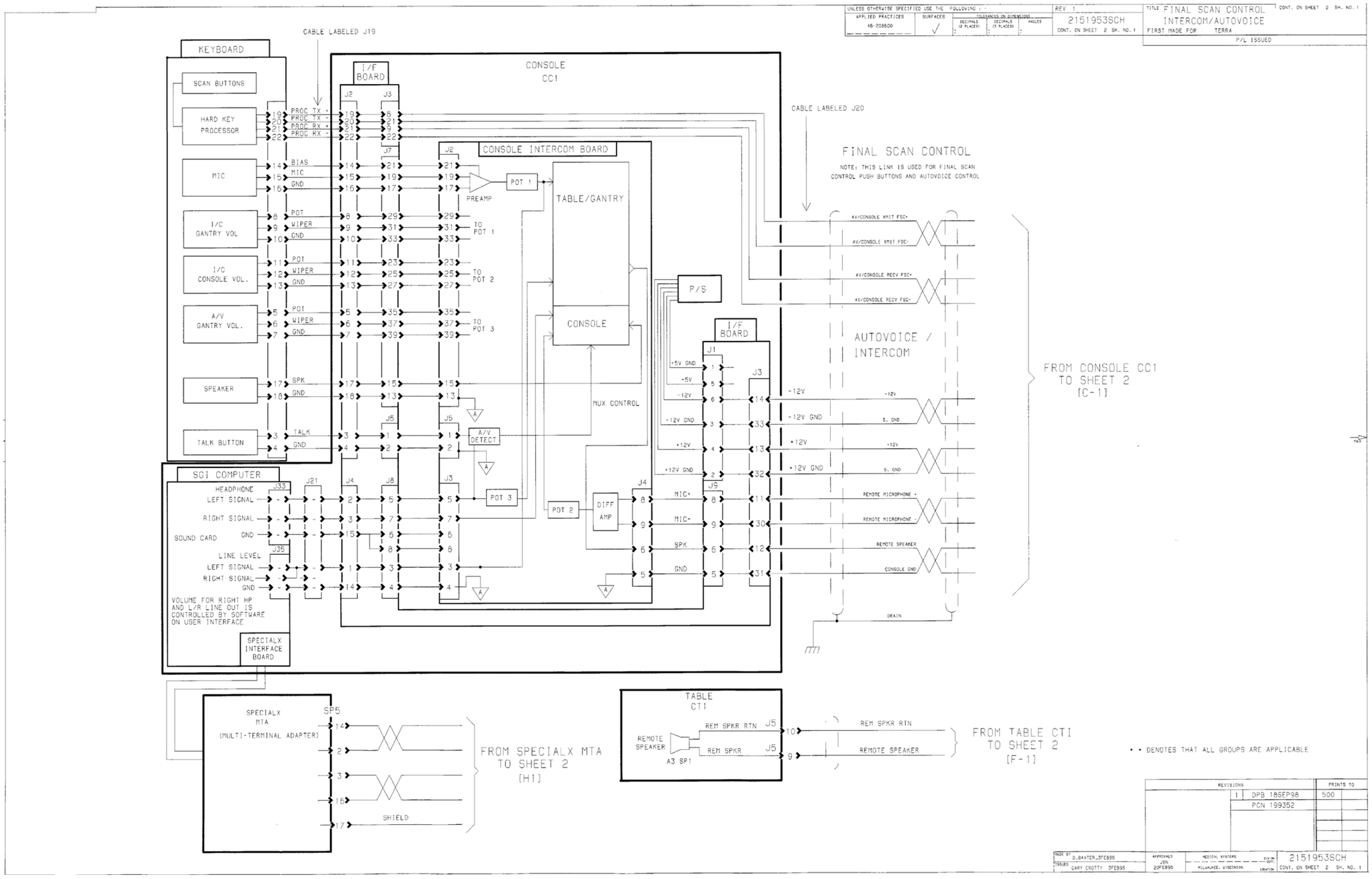

Figure 1-3 2151953 Sheet 1, Rev 1

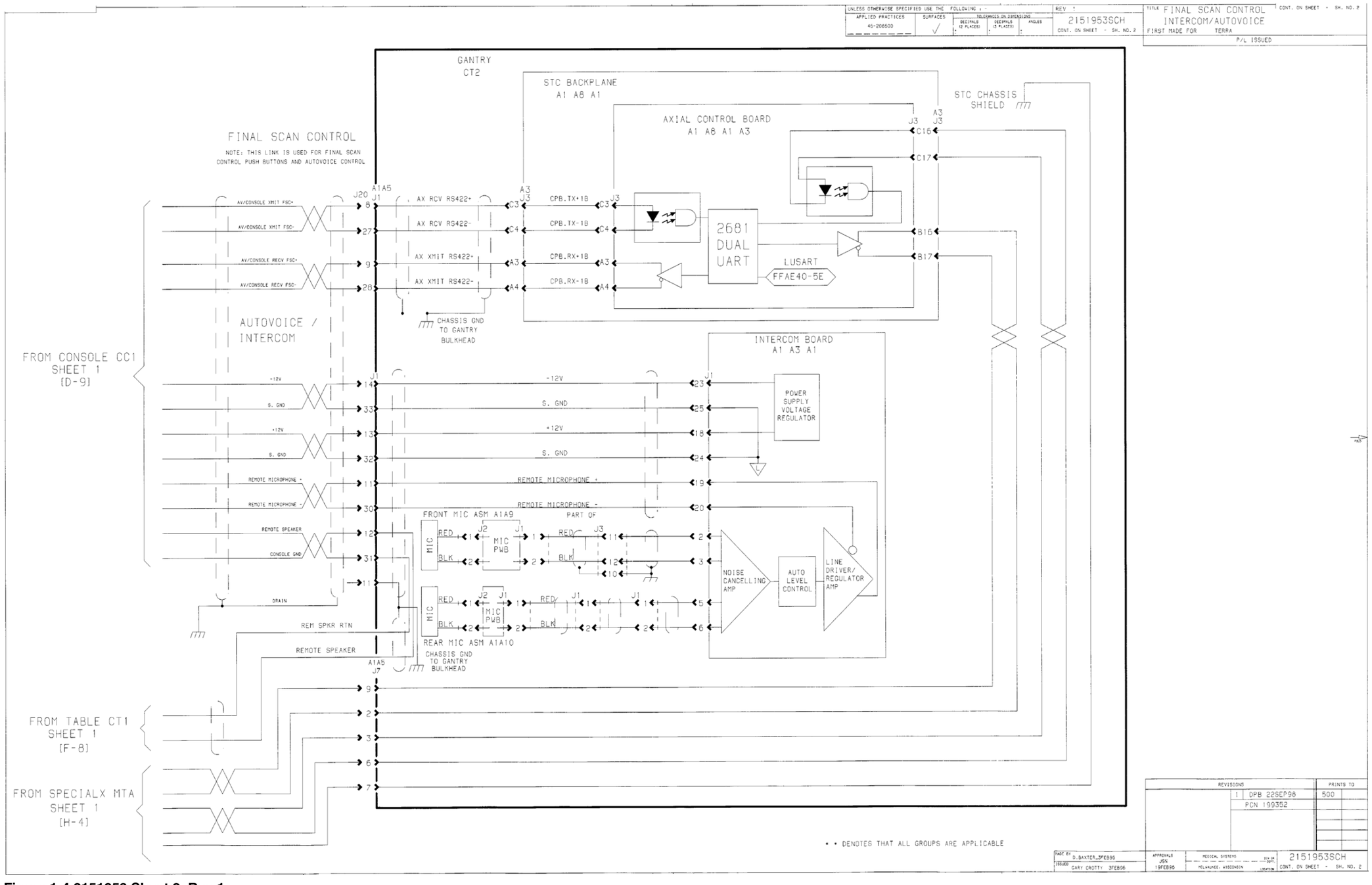

Figure 1-4 2151953 Sheet 2, Rev 1

Chapter 2
X-Ray Generation

Section 1.0 — Rotor Control - 2267317

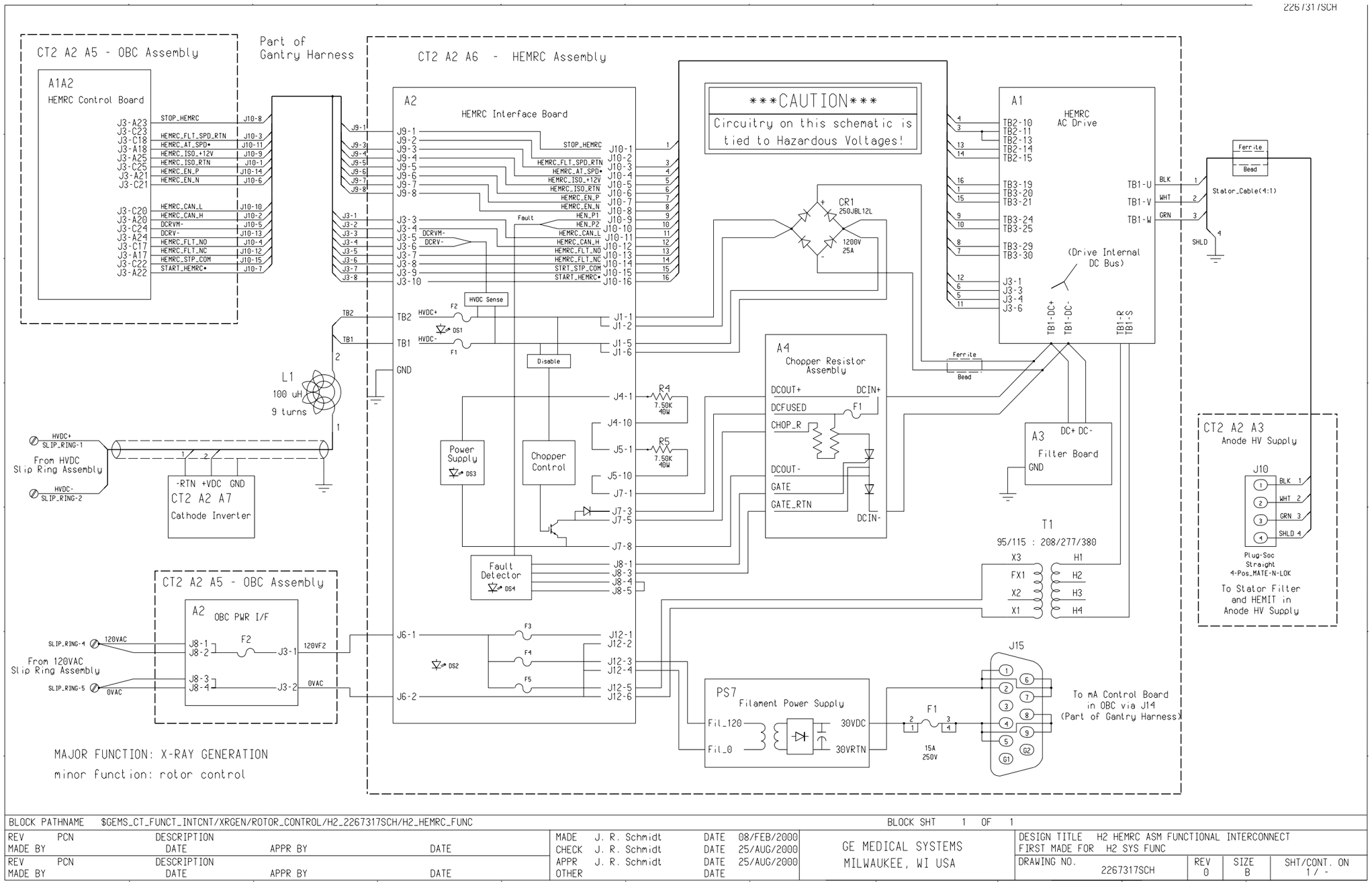

Figure 2-1 2267317 Sheet 1, Rev. 0

Section 2.0 — Exposure Enable - 2267735

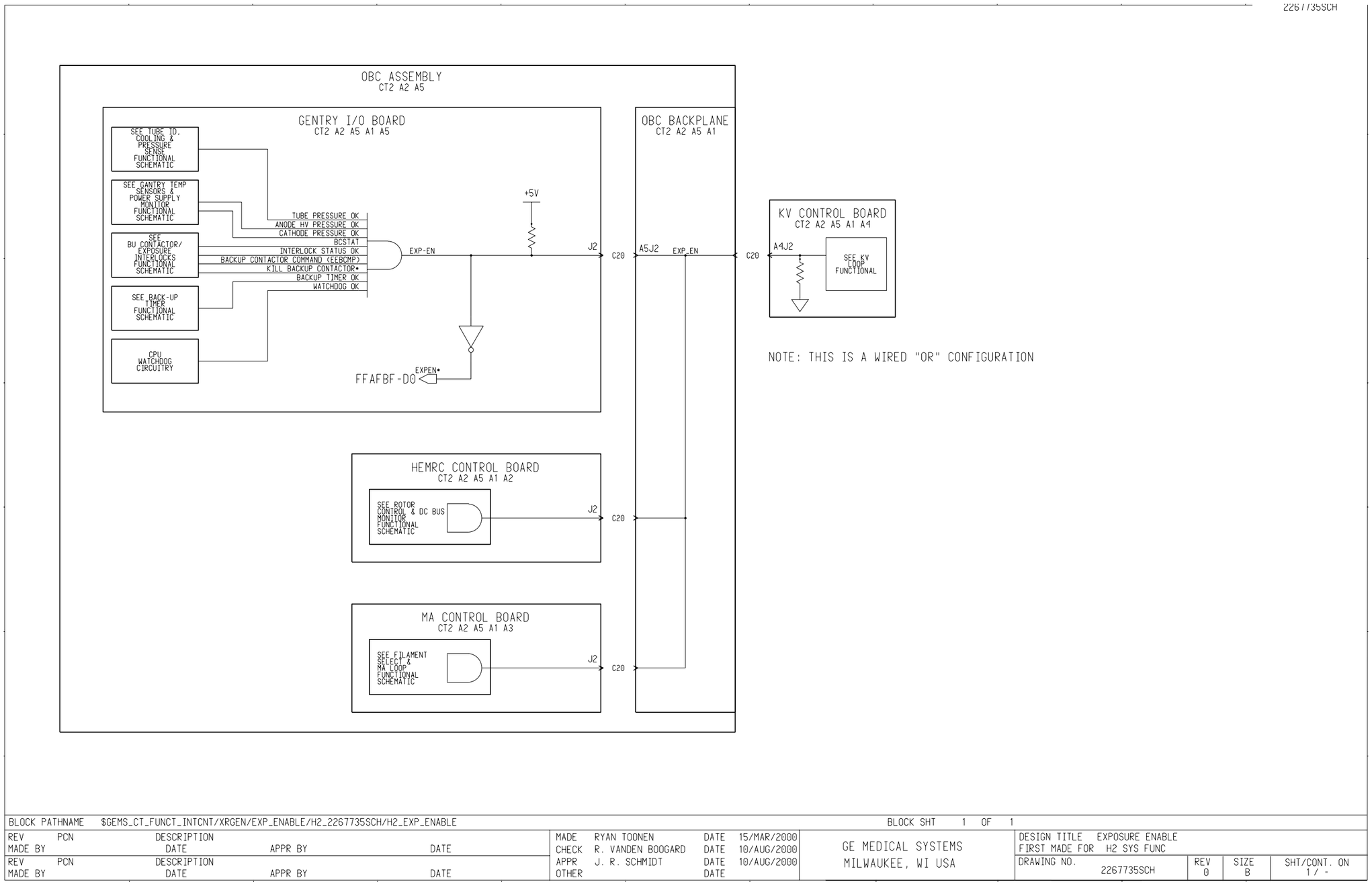

Figure 2-2 2267735 Sheet 1, Rev. 0

Section 3.0 — Rotating HVON Sense - 2267736

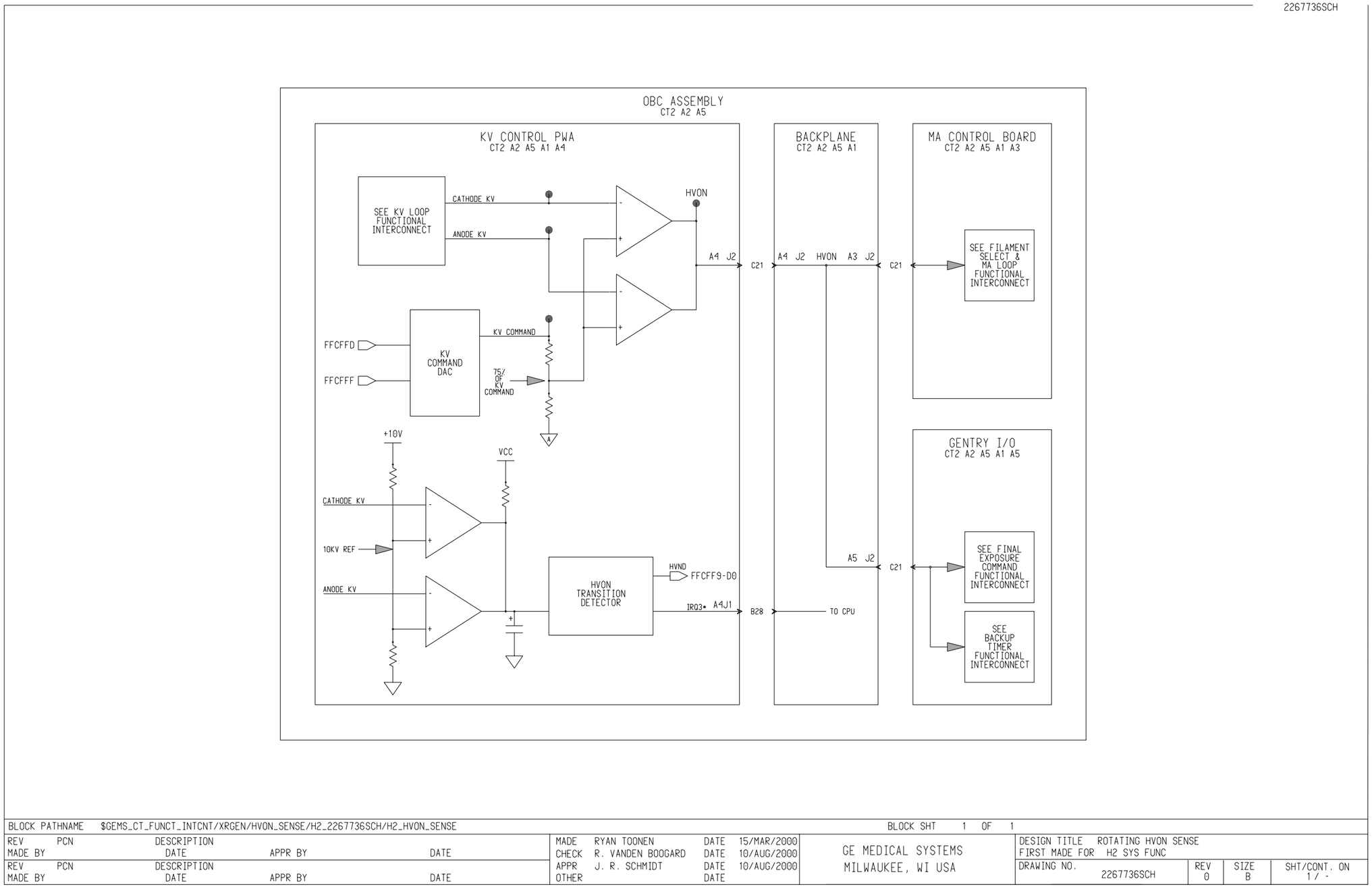

Figure 2-3 2267736 Sheet 1, Rev. 0

Section 4.0 — Filament Select and mA Loop - 2267737

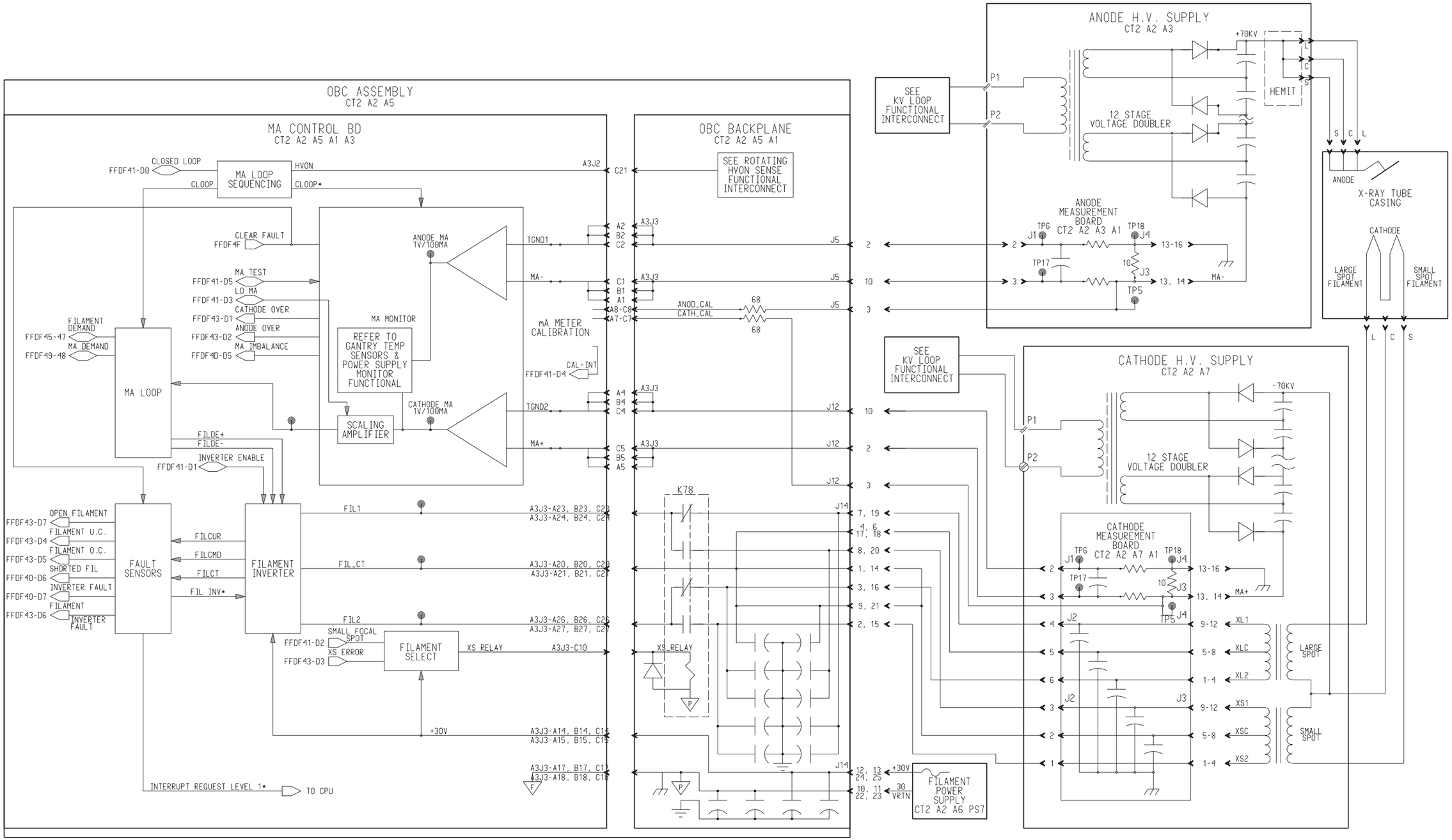

Figure 2-4 2267737 Sheet 1, Rev. 0

Section 5.0 — Tube ID, Cooling and Pressure Sense - 2267738

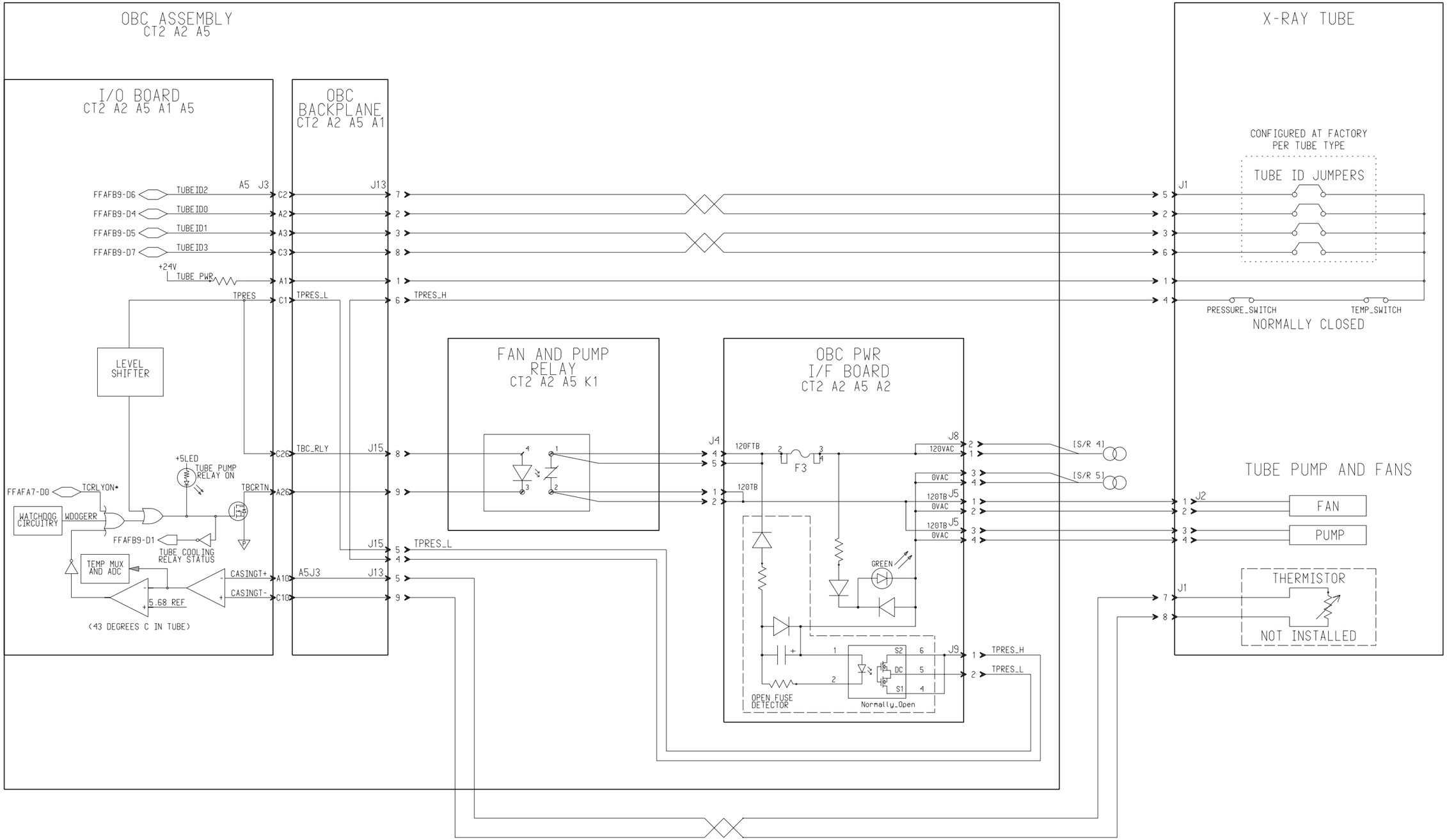

Figure 2-5 2267738 Sheet 1, Rev. 0

Section 6.0 — Back-Up Timer - 2267739

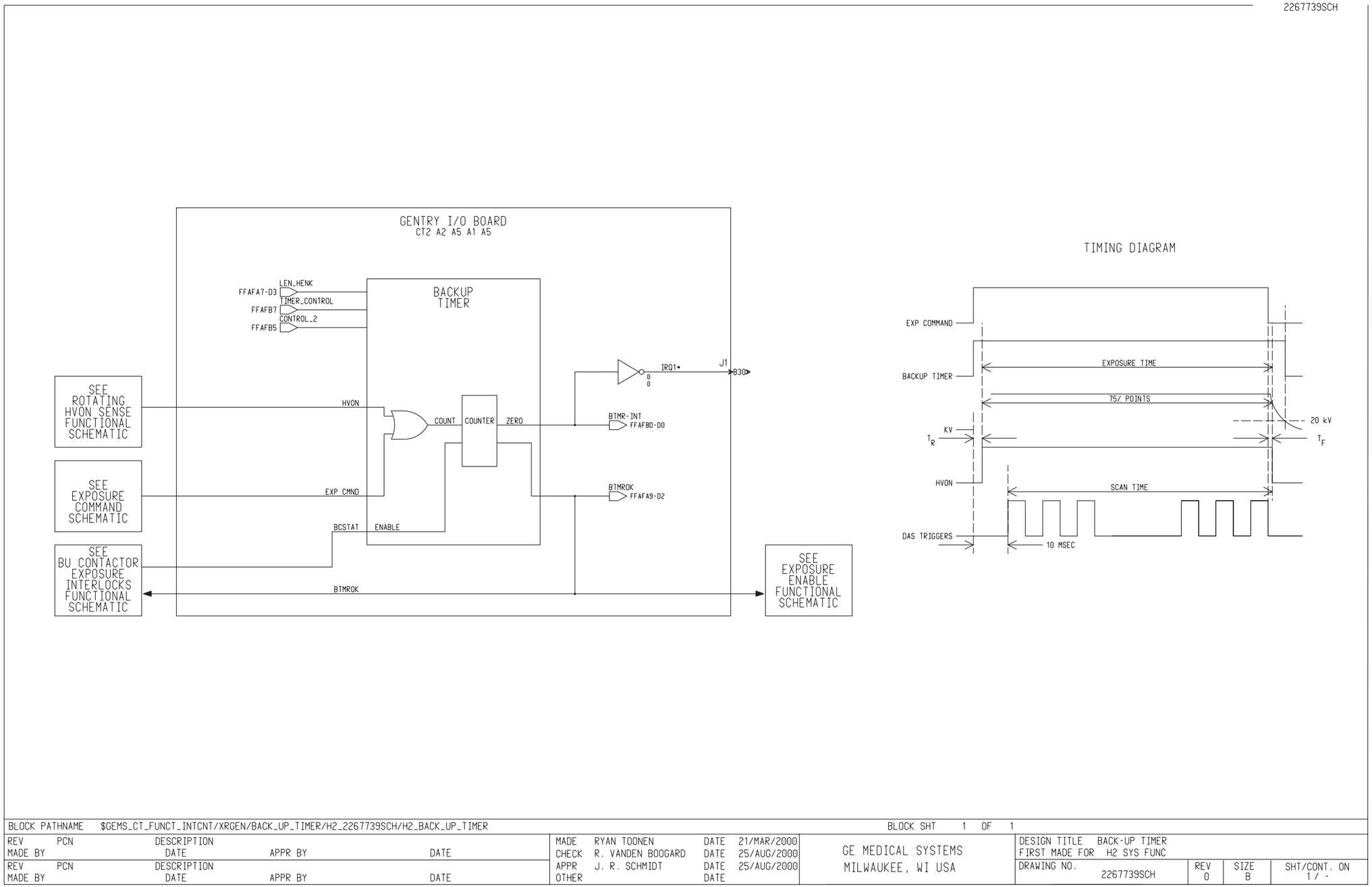

Figure 2-6 2267739 Sheet 1, Rev. 0

Section 7.0 — kV Loop - 2267740

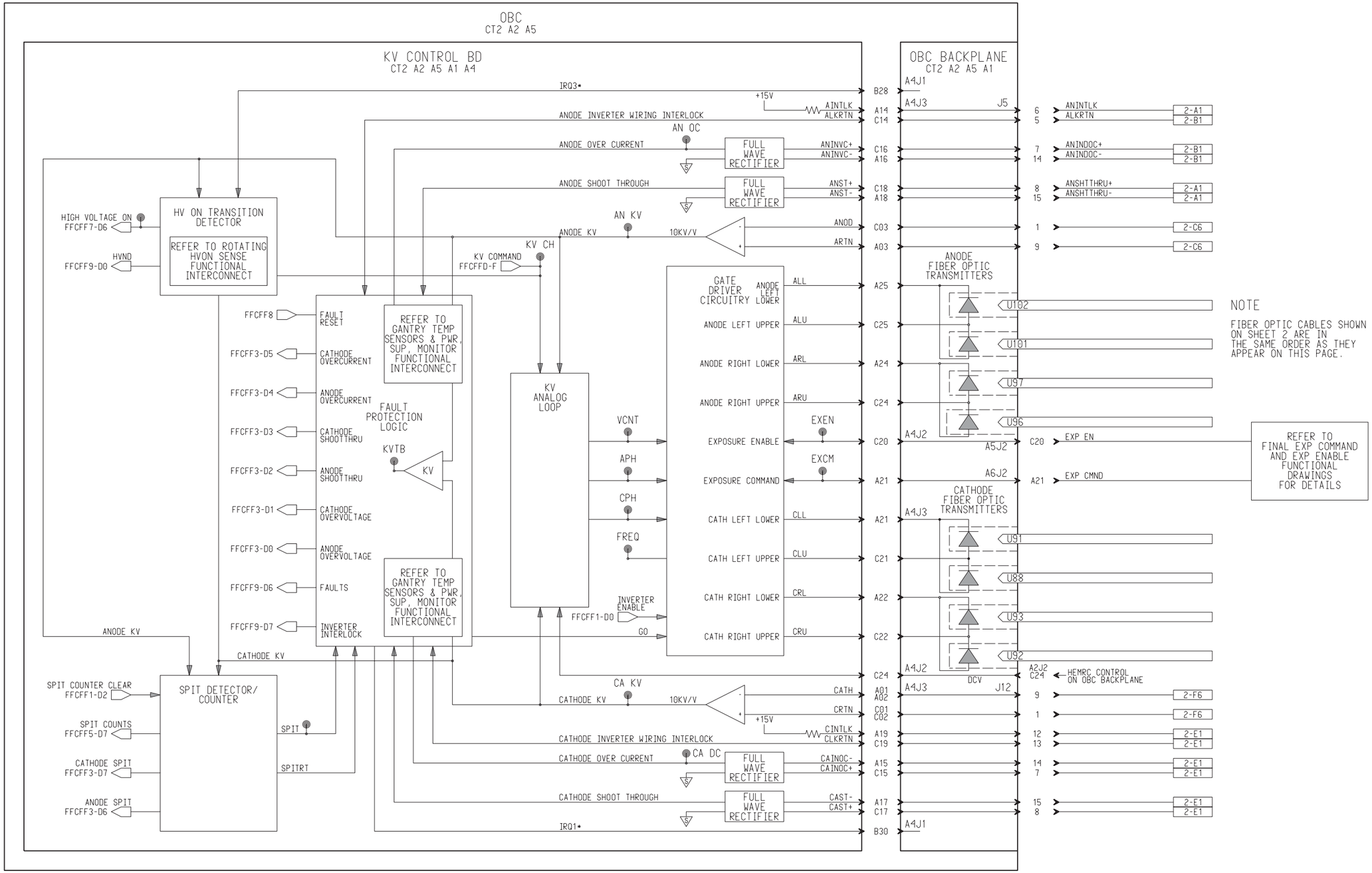

Figure 2-7 2267740 Sheet 1, Rev. 0

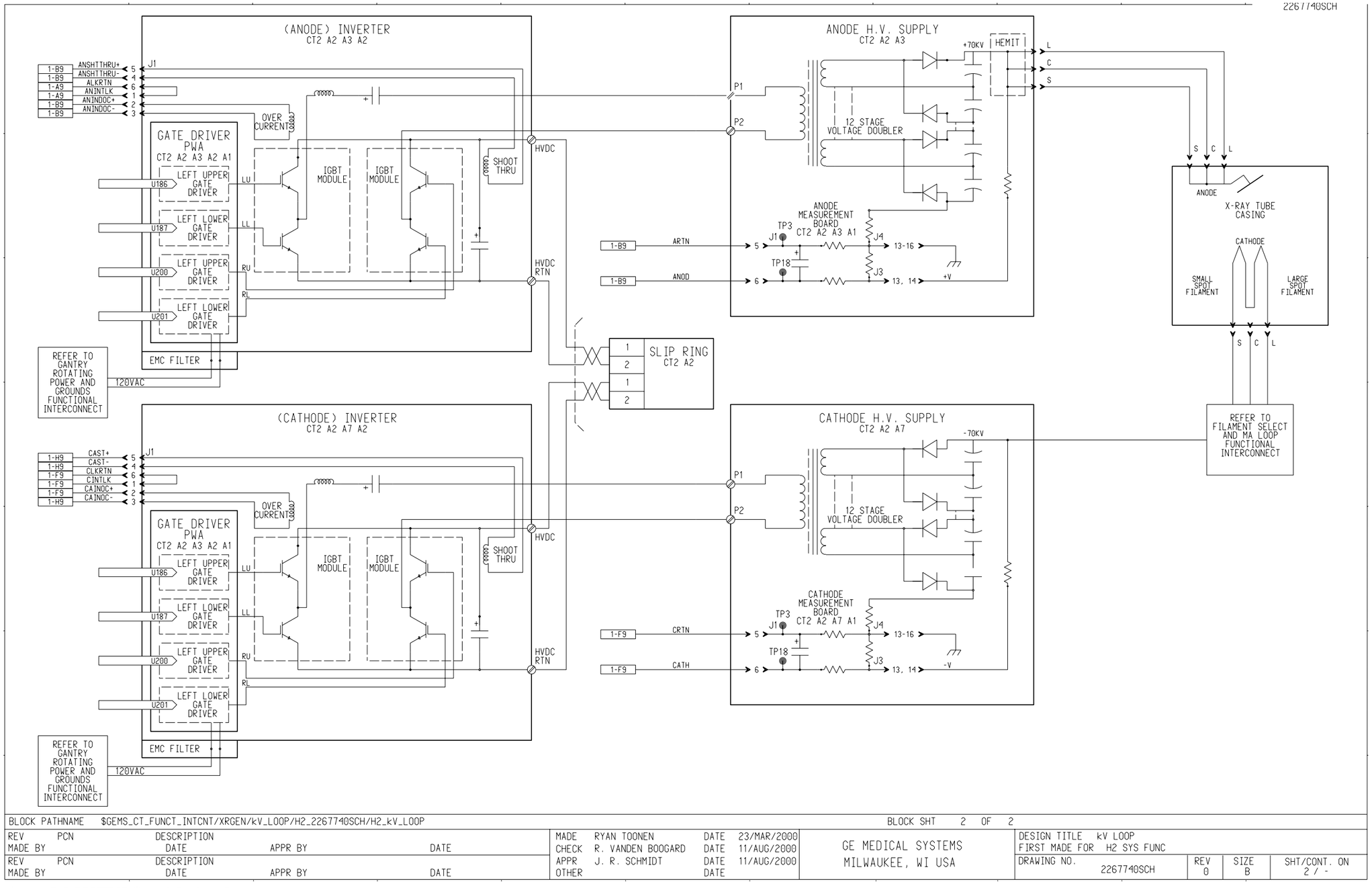

Figure 2-8 2267740 Sheet 2, Rev. 0

Section 8.0 — BU Contactor / Exposure Interlocks - 2267741

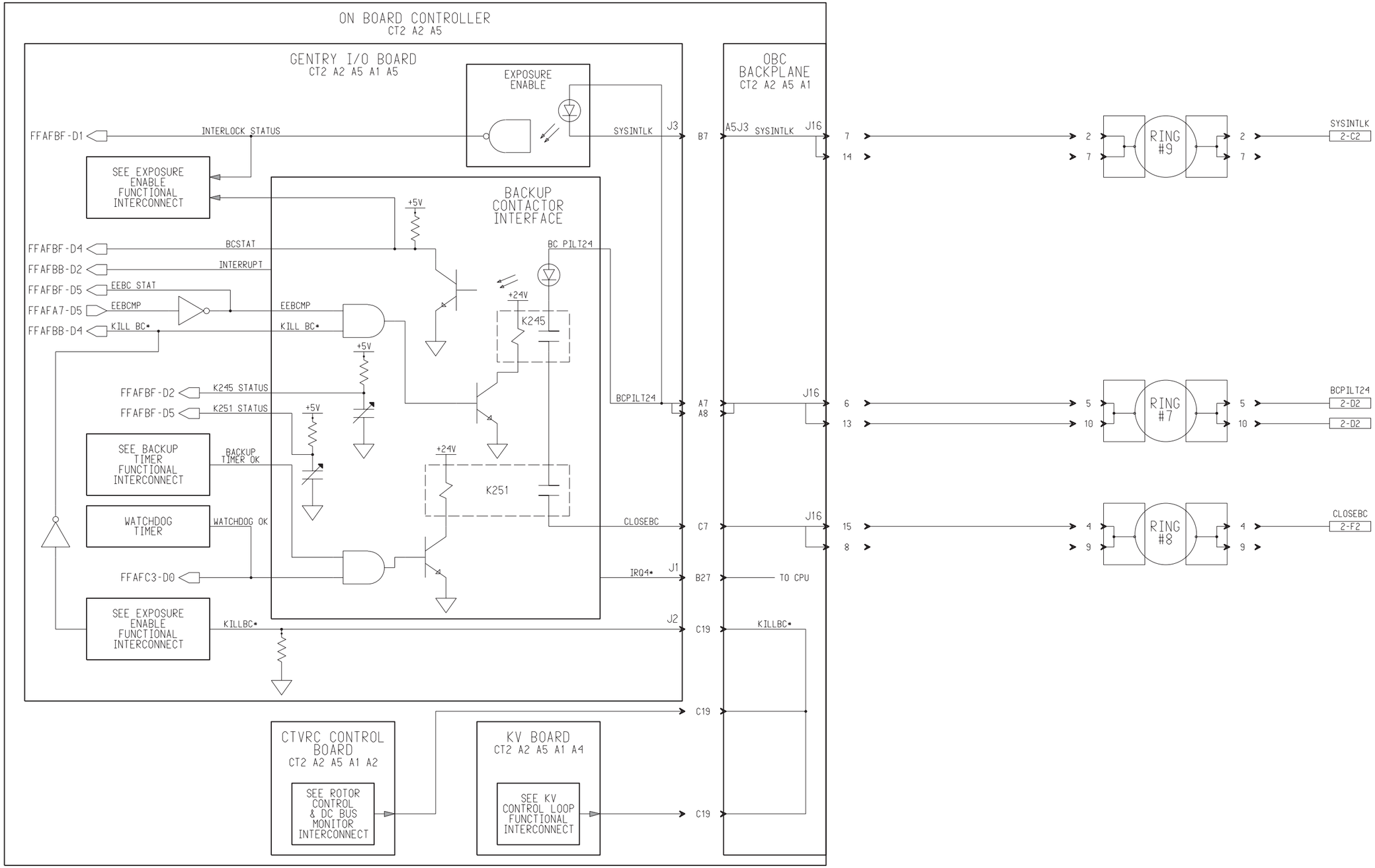

Figure 2-9 2267741 Sheet 1, Rev. 0

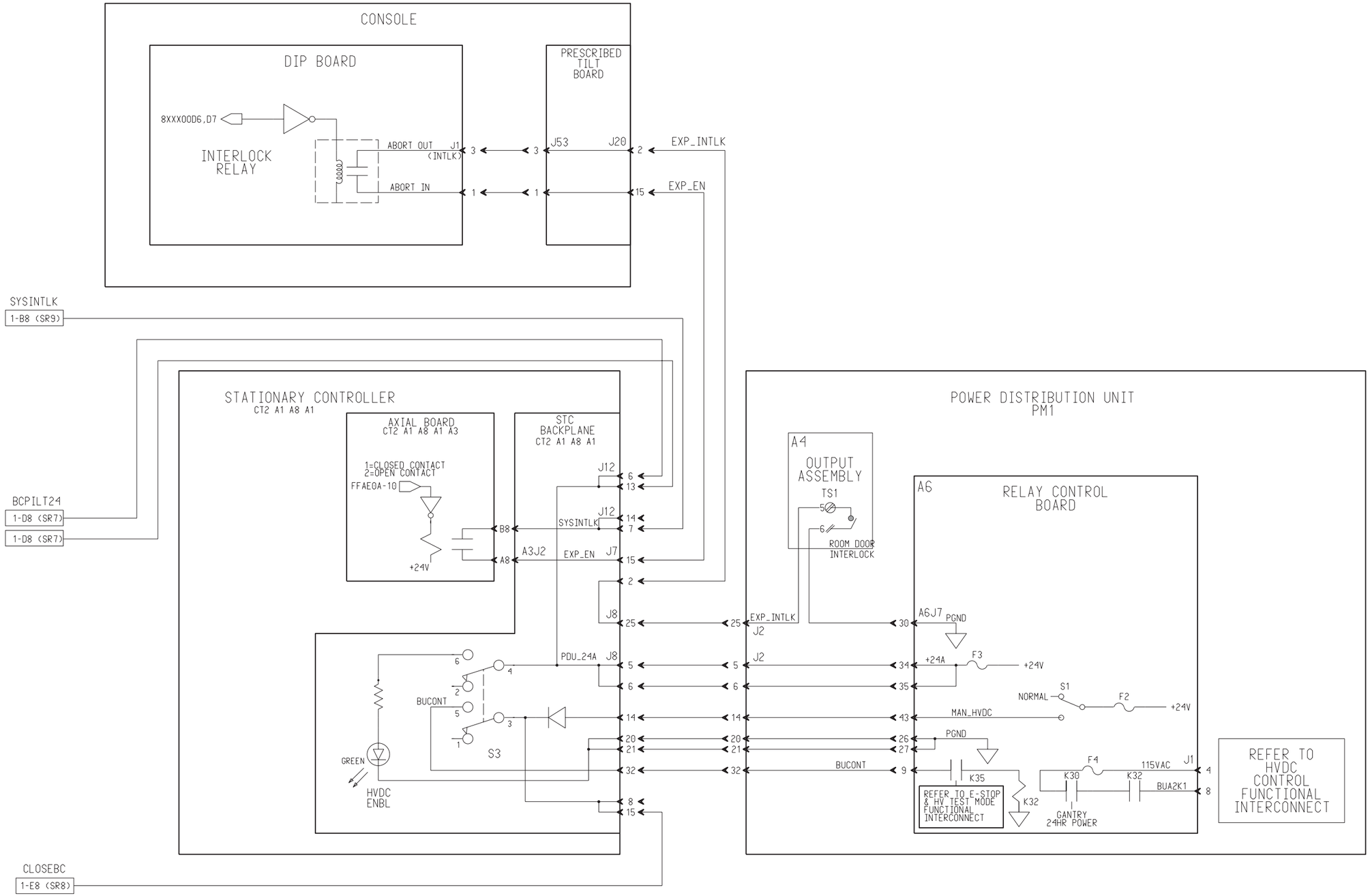

Figure 2-10 2267741 Sheet 2, Rev. 0 (CPDU shown; see Figure 2-11 for NGPDU)

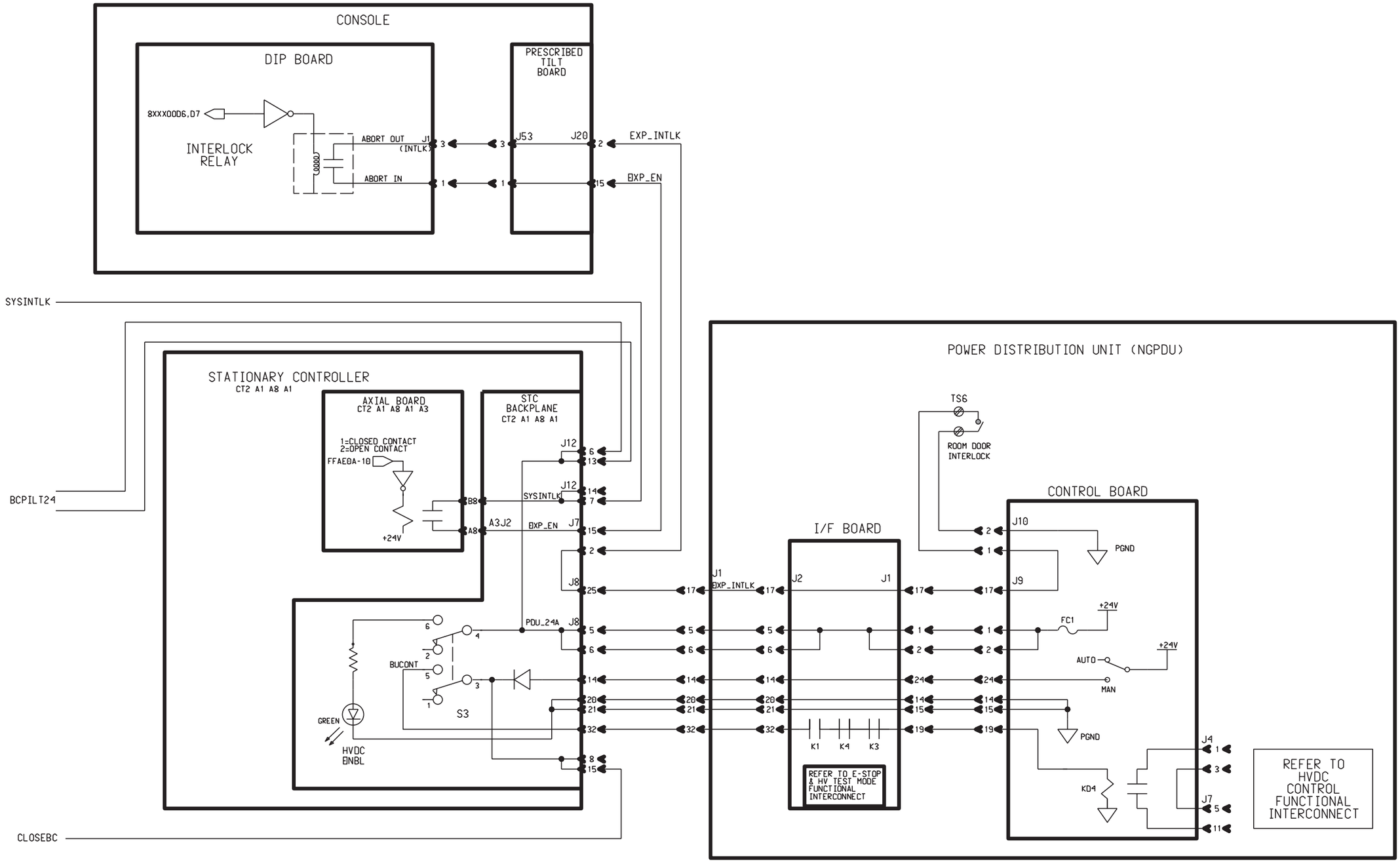

Figure 2-11 BU Contactor / Exposure Interlocks (NGPDU shown; see Figure 2-10 for CPDU)

Section 9.0 — X-Ray Collimation and Filtration - 2267744

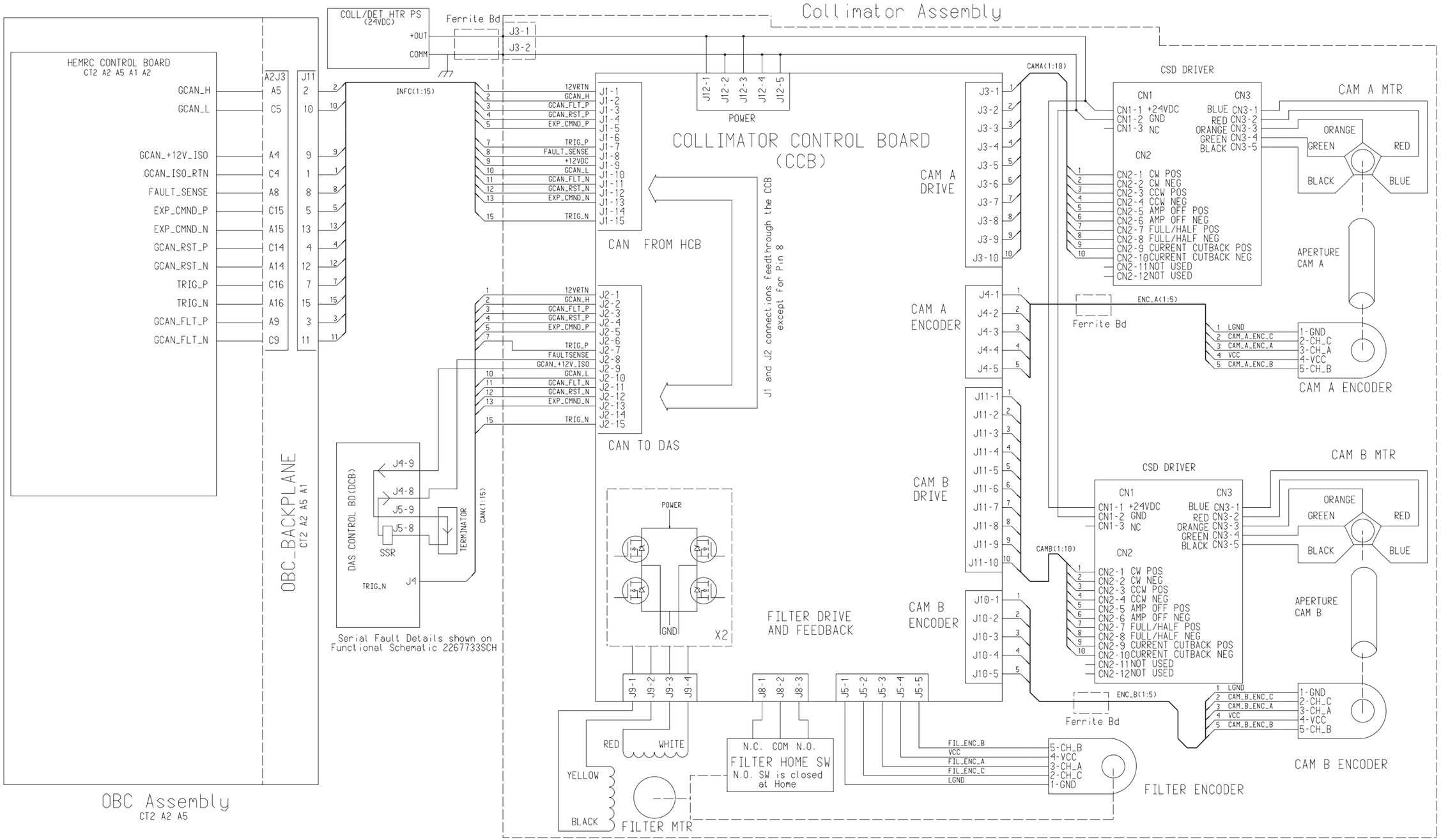

Figure 2-12 2267744 Sheet 1, Rev. 0

Section 10.0 — Final Exposure Command - 2267746

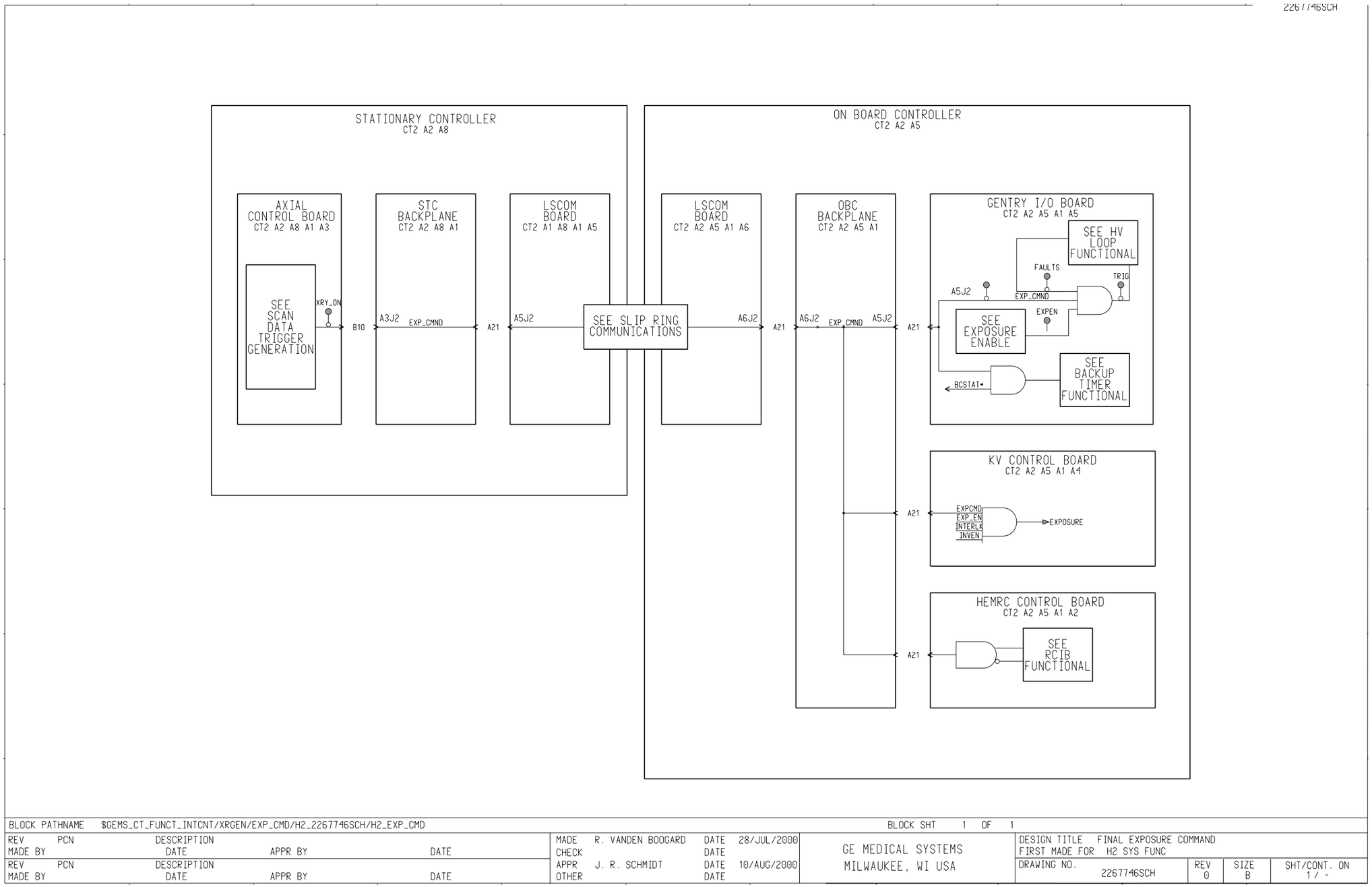

Figure 2-13 2267746 Sheet 1, Rev. 0

Chapter 3
Data Acquisition

Section 1.0 — DAS Power Supplies - 2302185

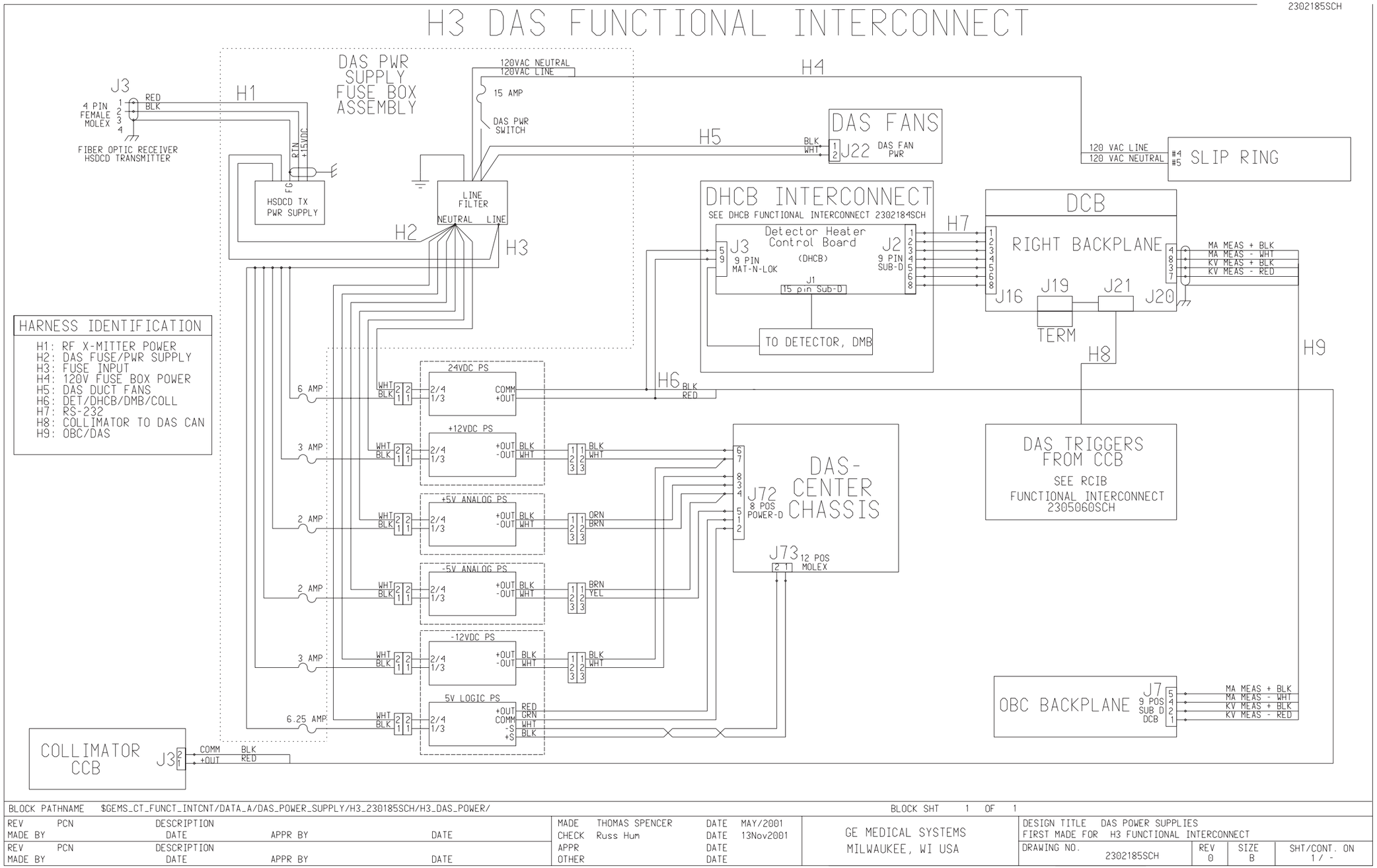

Figure 3-1 2302185 Sheet 1, Rev. 0

Section 2.0 — Detector Heater Control Board - 2302184

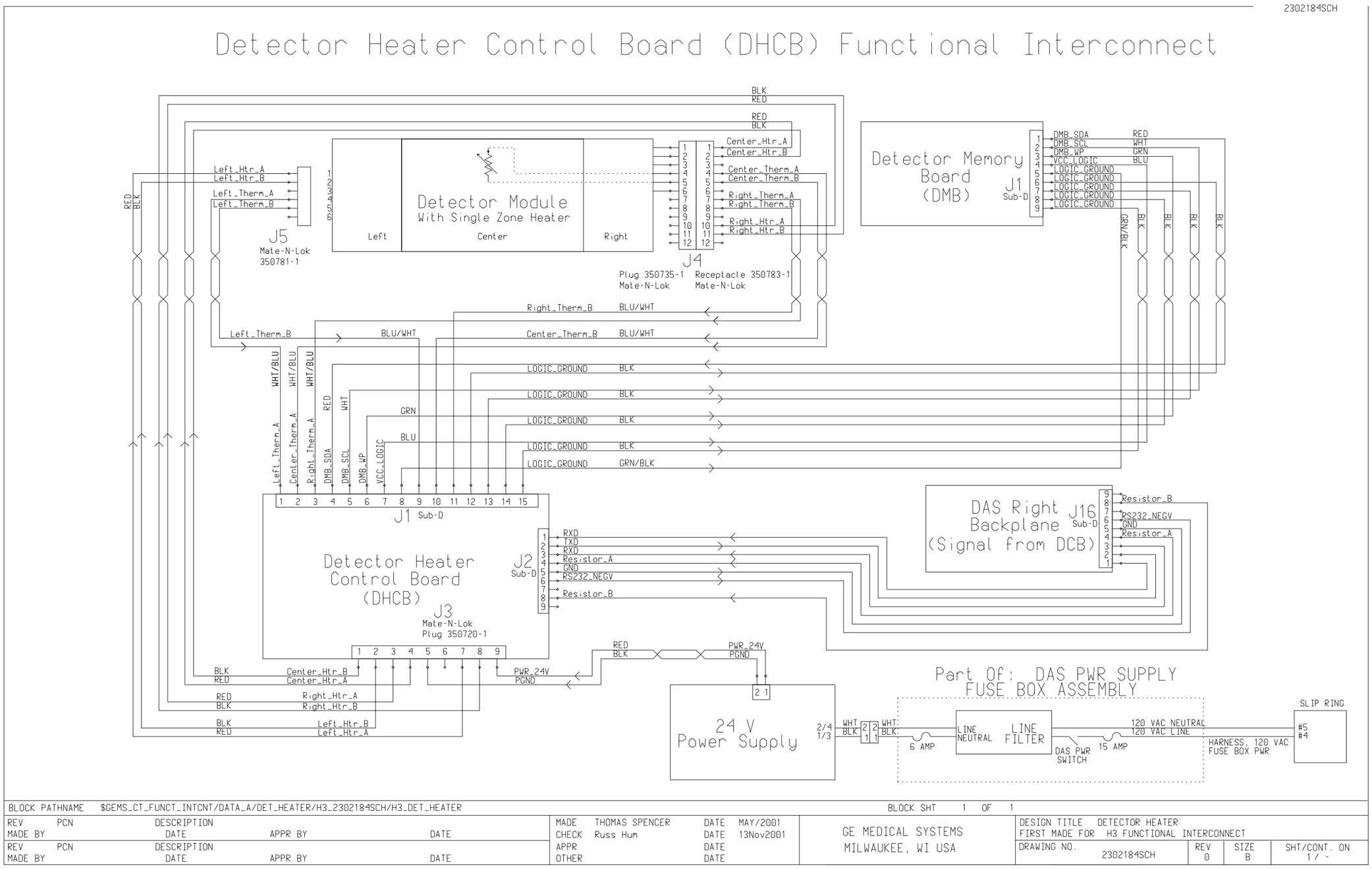

Figure 3-2 2302184 Sheet 1, Rev. 0

Chapter 4
Patient Positioning

Section 1.0 — Patient Alignment Lights - 2126249

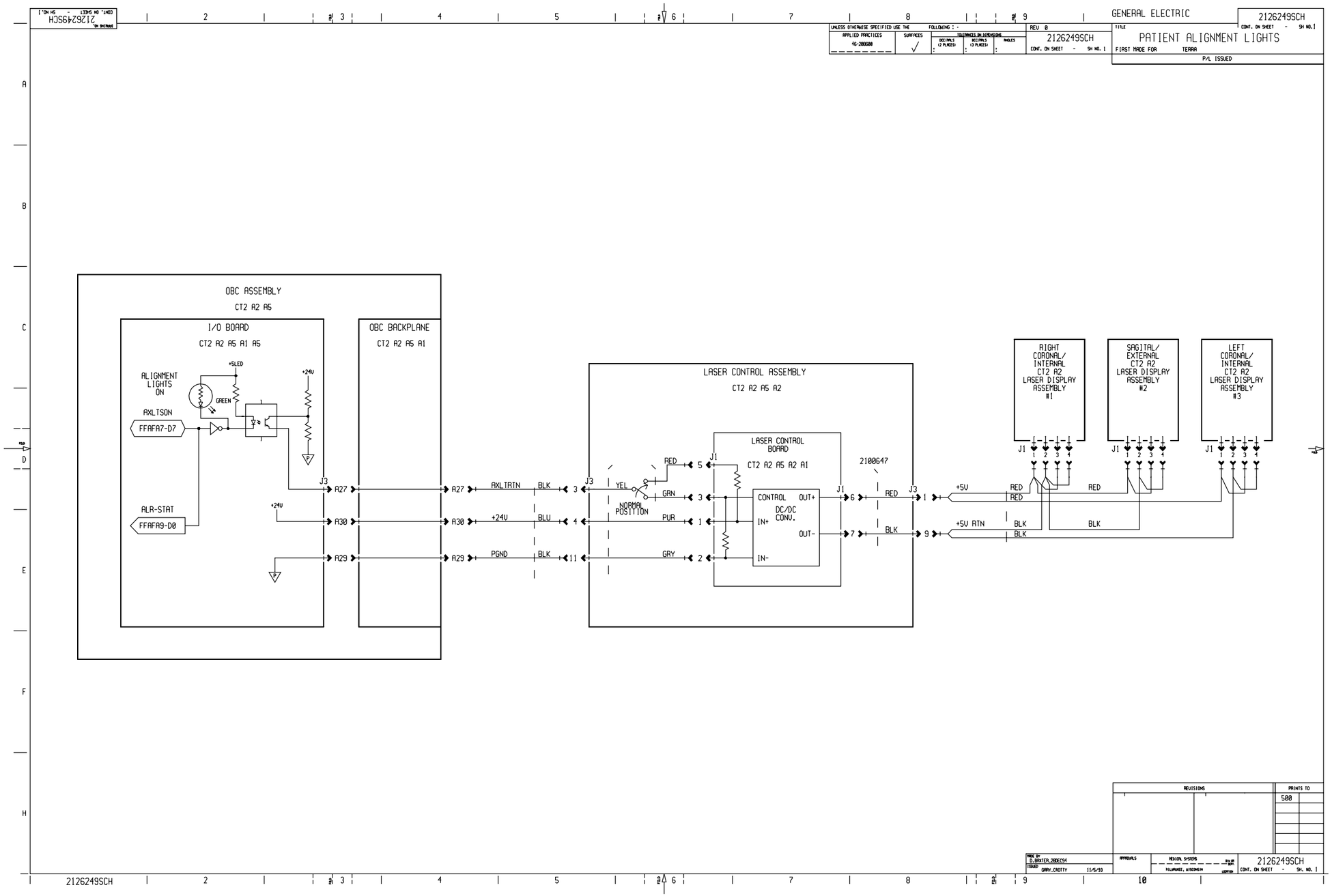

Figure 4-1 2126249 Sheet 1, Rev 0

Section 2.0 — Table Gantry Sync - 2267745

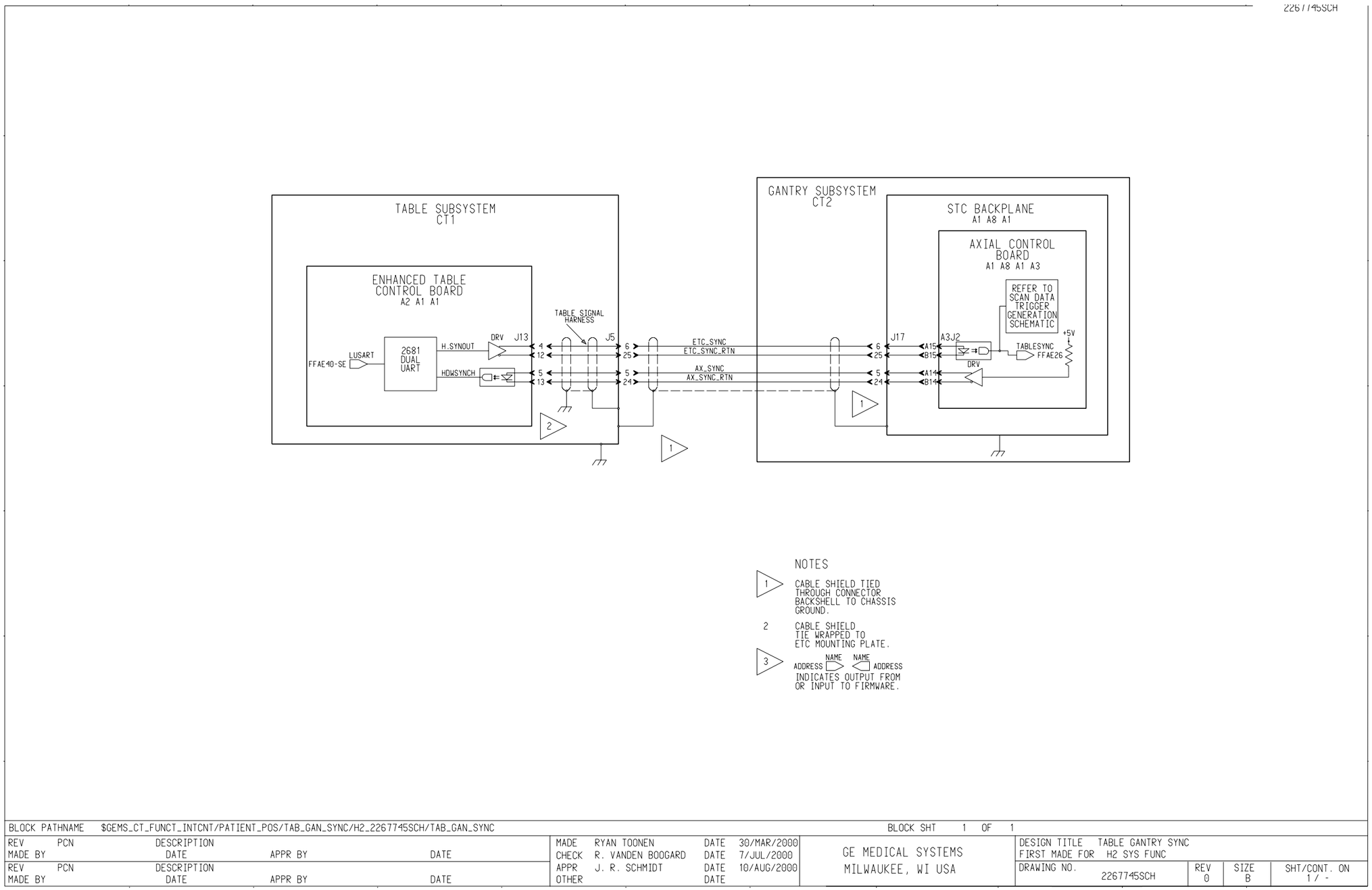

Figure 4-2 2267745 Sheet 1, Rev. 0

Section 3.0 — Table Elevation Drive - 2267754

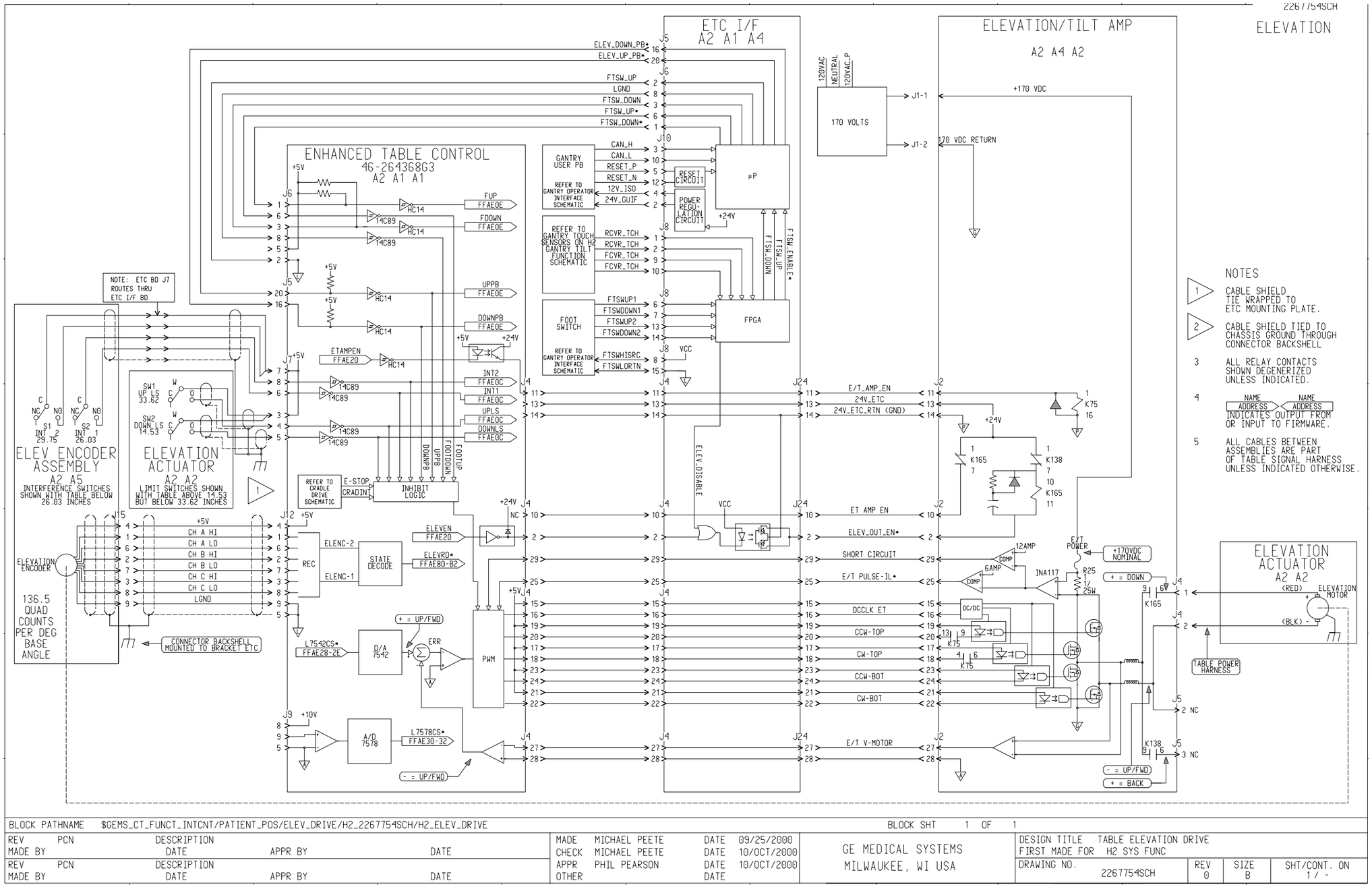

Figure 4-3 2267754 Sheet 1, Rev. 0

Section 4.0 — Gantry Tilt Function - 2267756

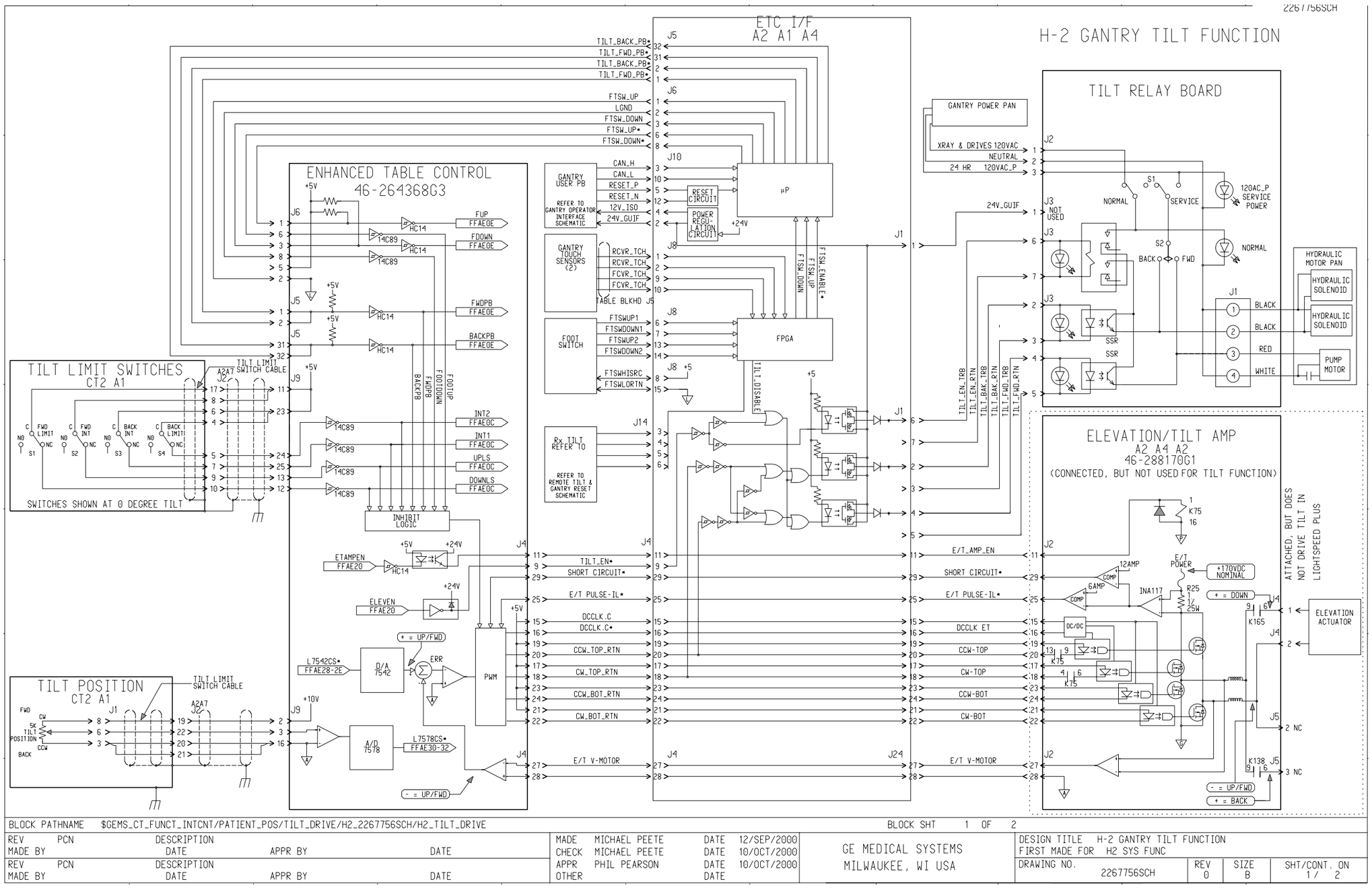

Figure 4-4 2267756 Sheet 1, Rev. 0

Section 5.0 — Table Cradle Drive (Vertical & Longitudinal Drives) - 2123540

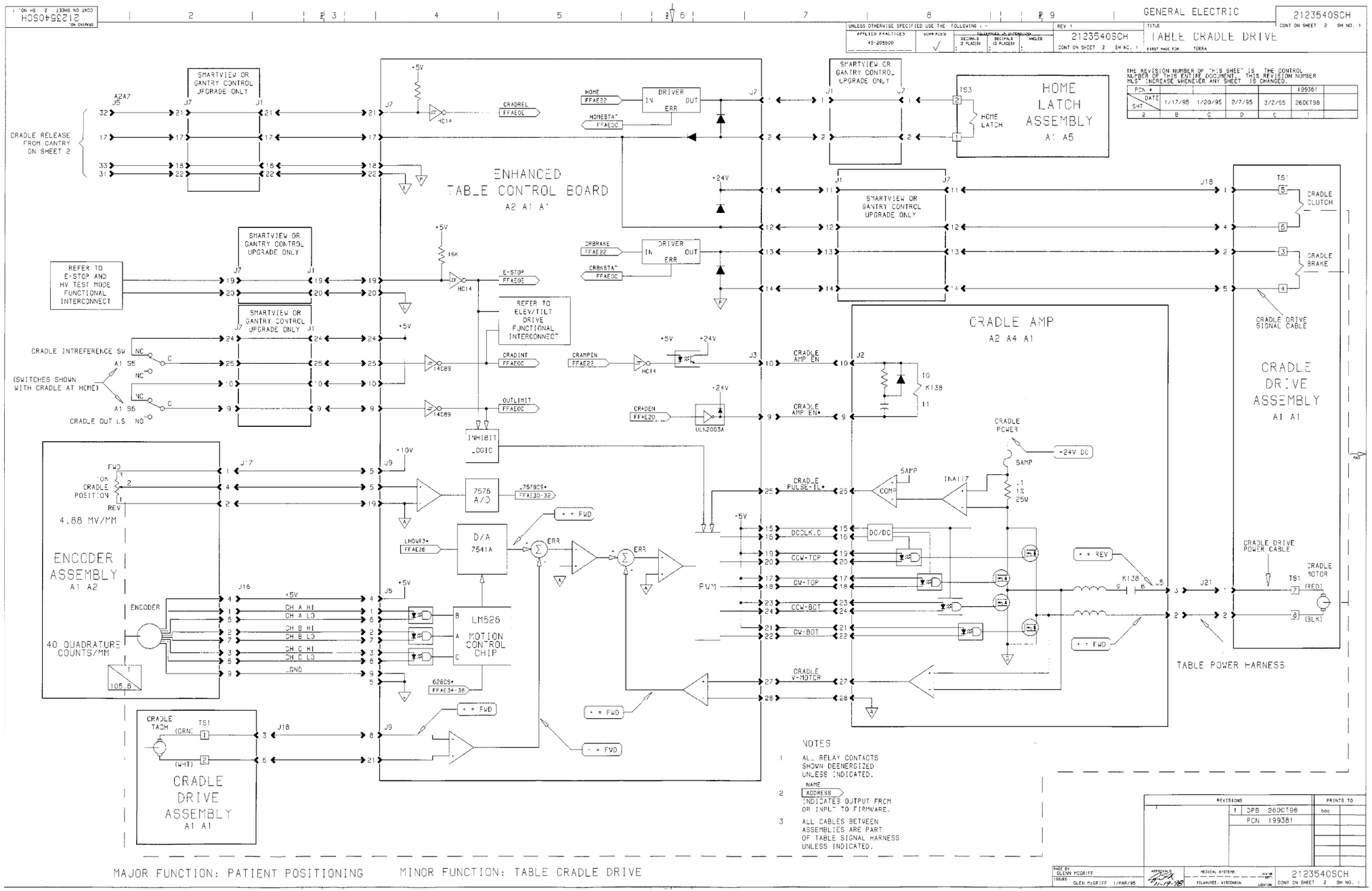

Figure 4-5 2123540 Sheet 1, Rev 1

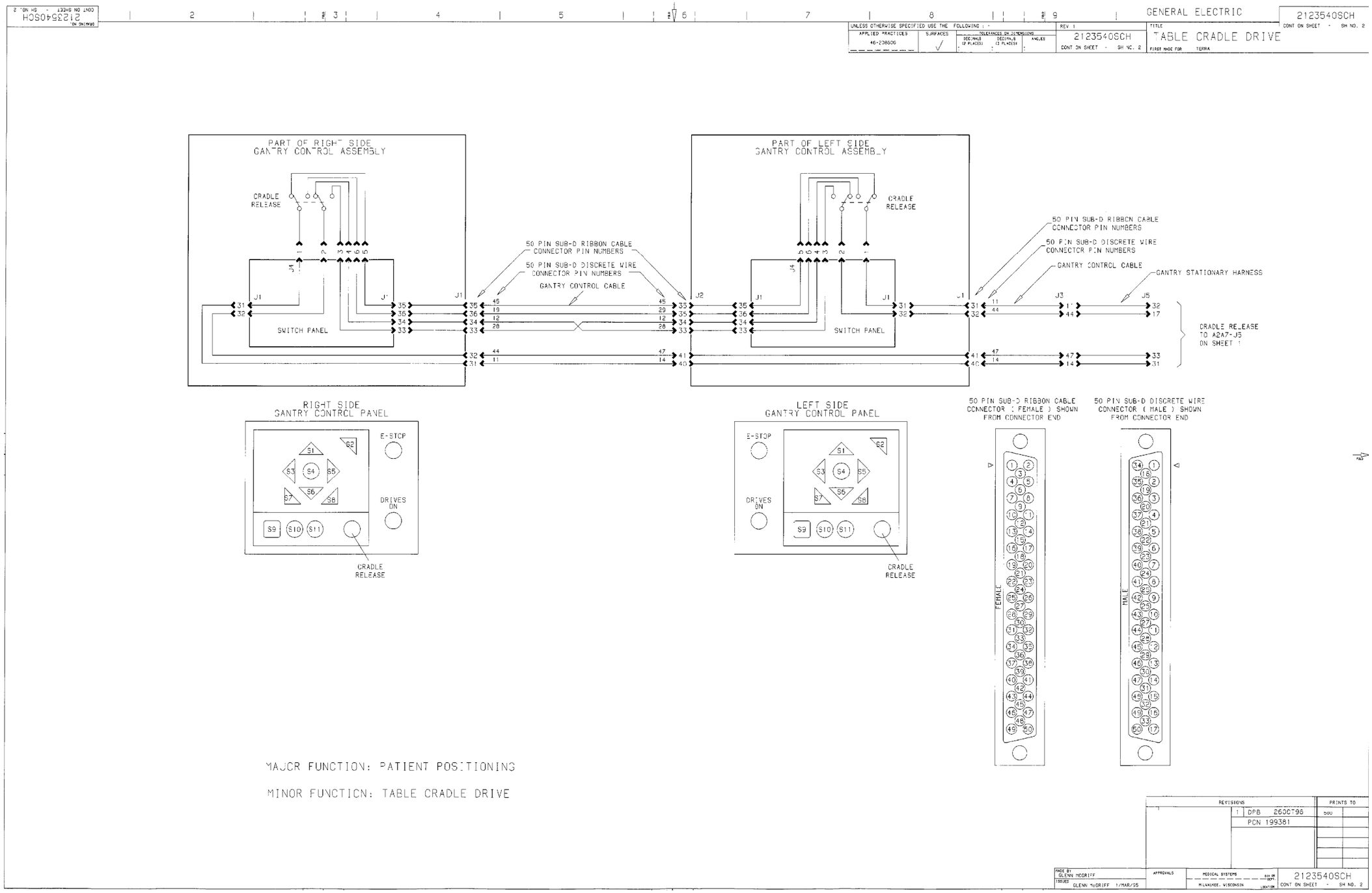

Figure 4-6 2123540 Sheet 2, Rev 2

Chapter 5
Axial Control

Section 1.0 — Axial Servo Control Loop - 2267757

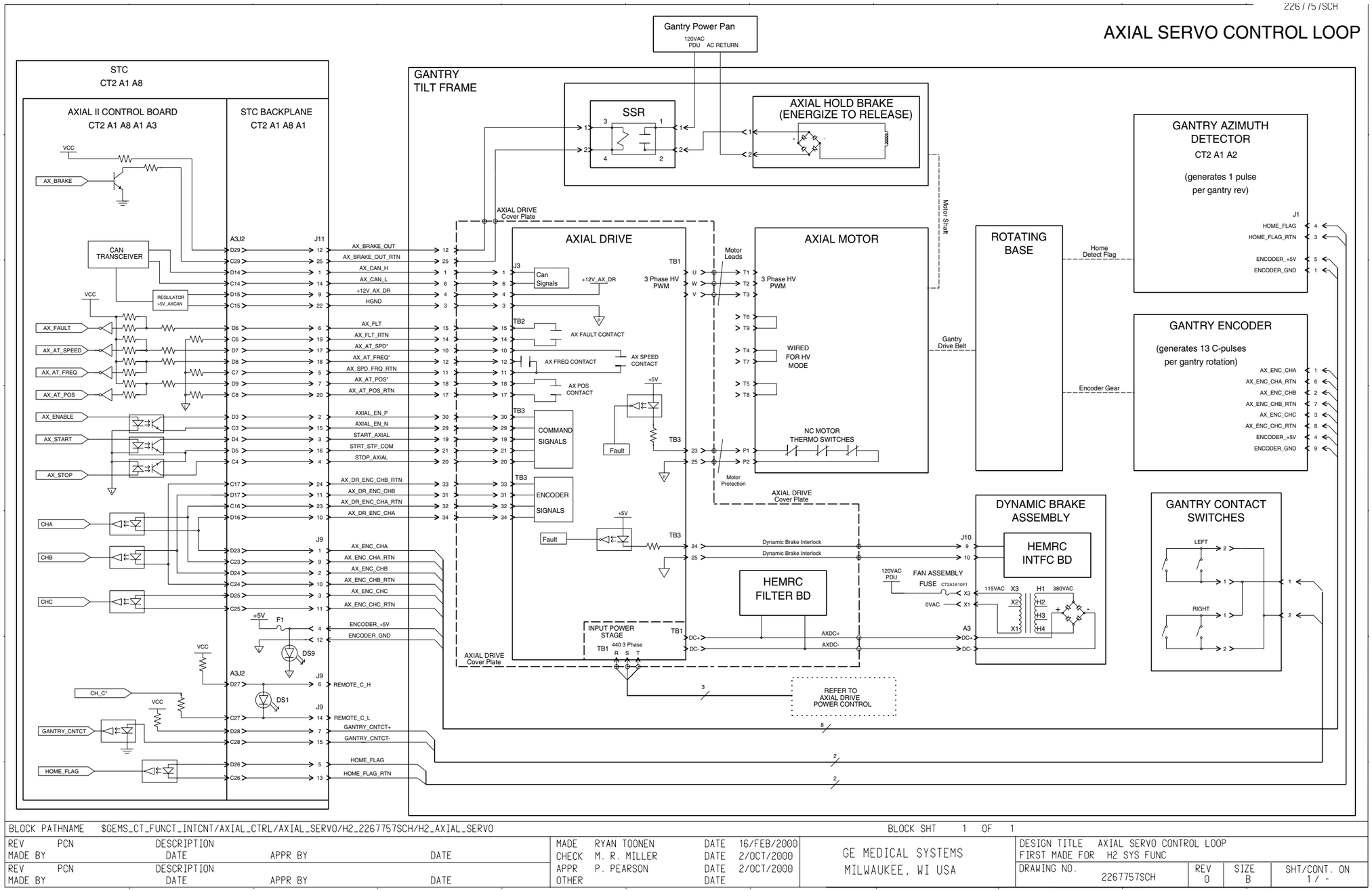

Figure 5-1 2267757 Sheet 1 Rev. 0

Section 2.0 — Axial Drive Power Control - 2267784

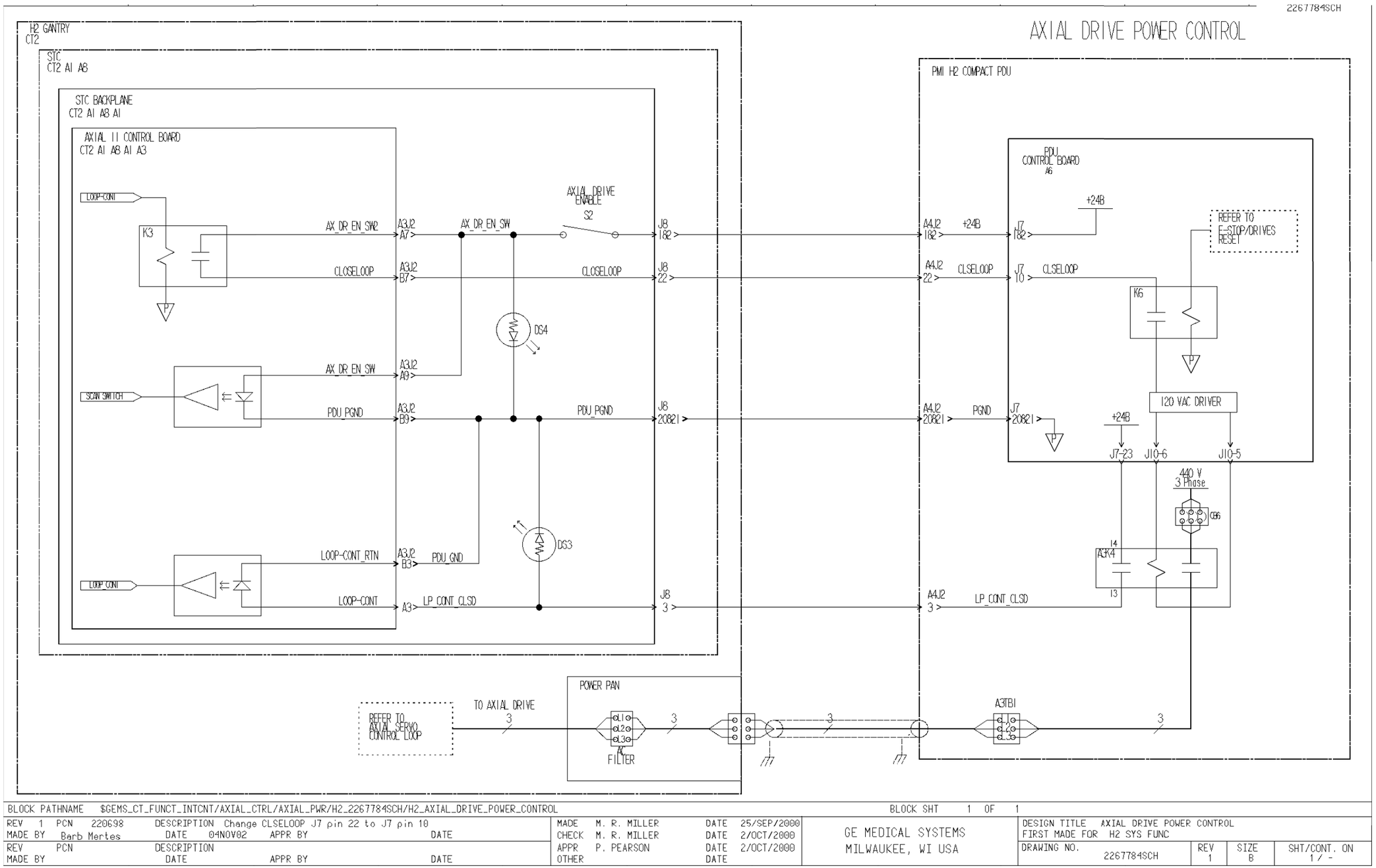

Figure 5-2 2267784 Sheet 1 Rev. 1

Chapter 6
Operator I/O

Section 1.0 — Gantry Operator Interface - 2267760

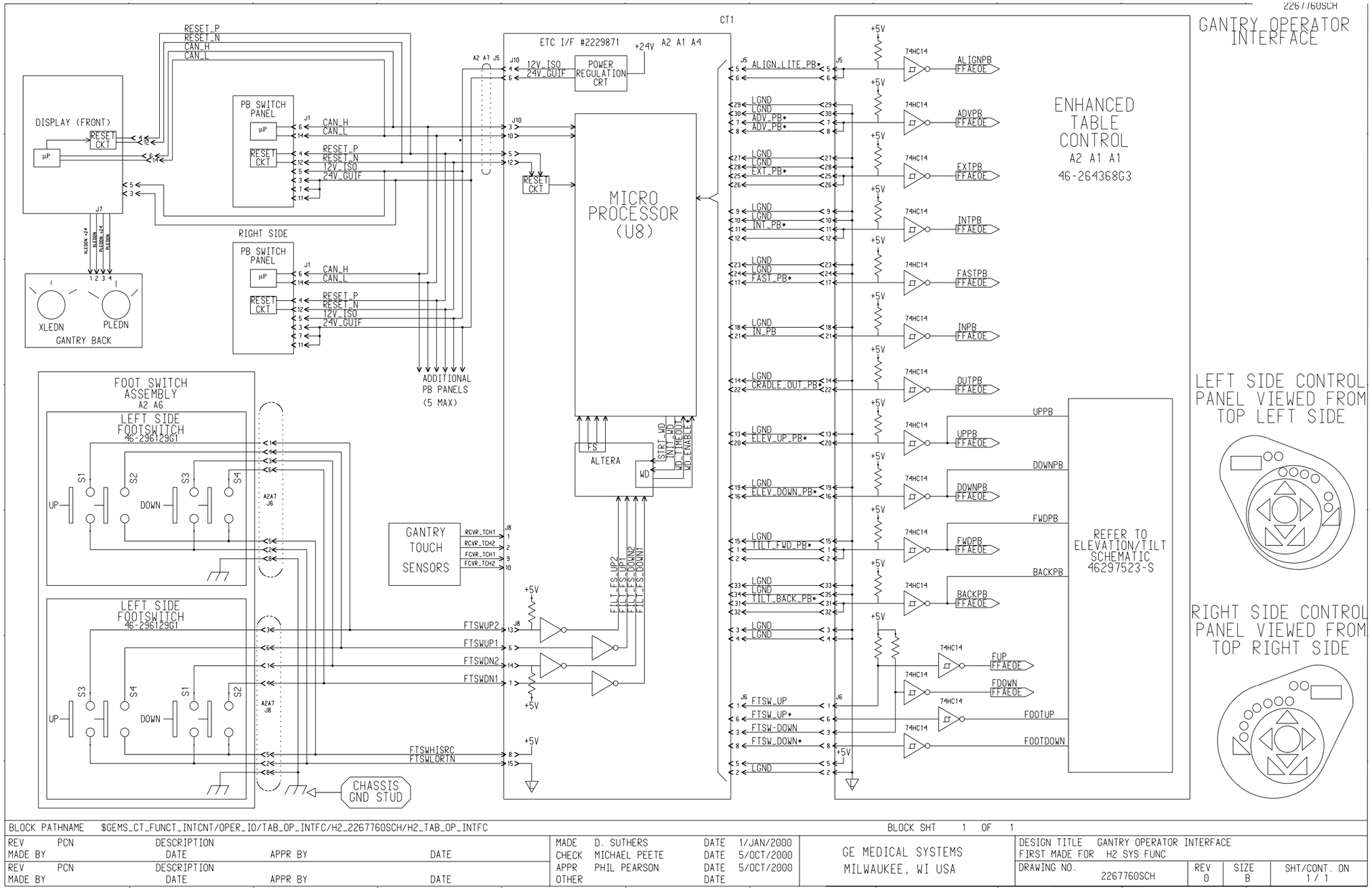

Figure 6-1 2267760 Sheet 1, Rev. 0

Section 2.0 — Site X-Ray ON Light - 2267761

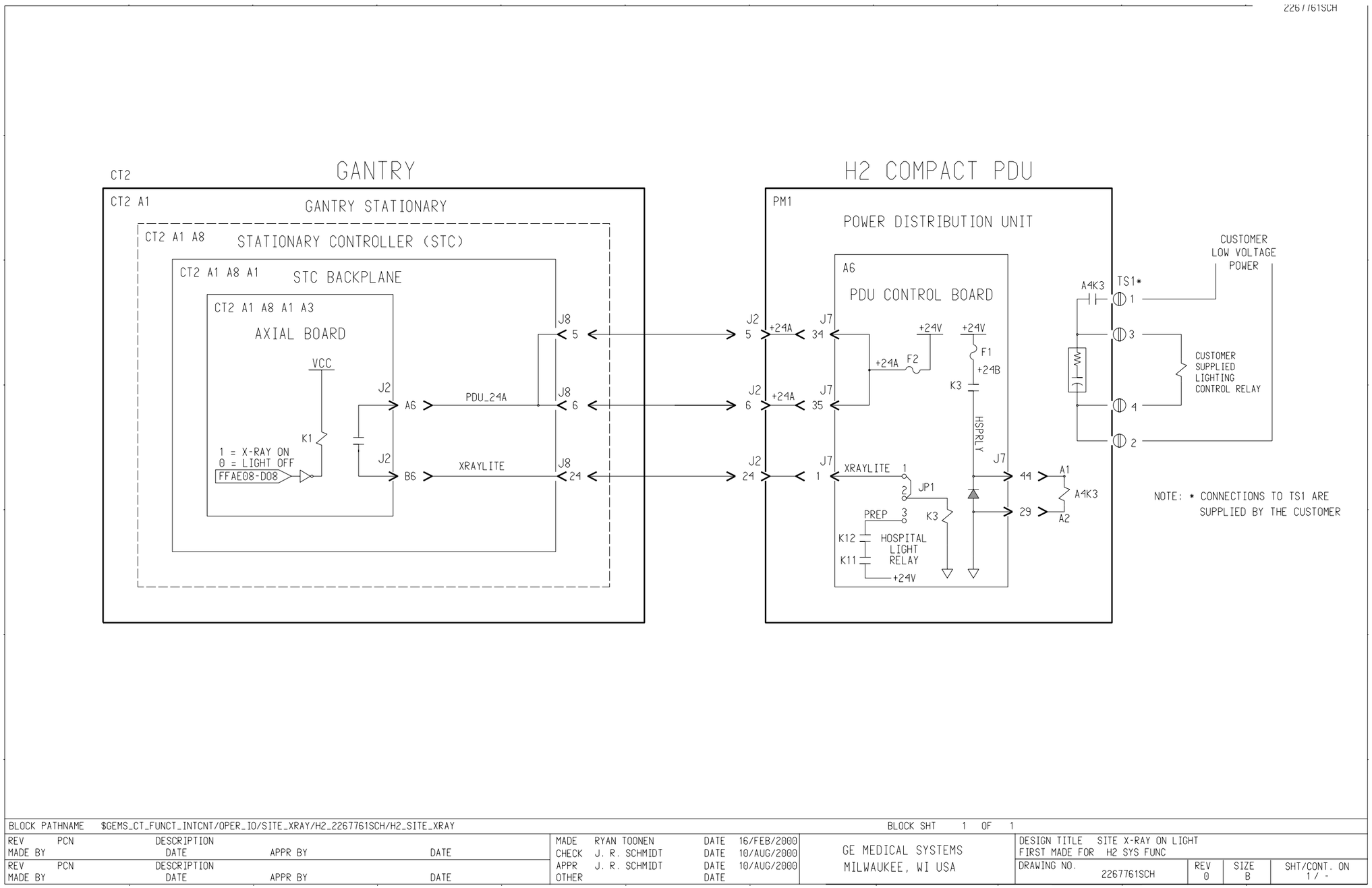

Figure 6-2 2267761 Sheet 1, Rev. 0 (CPDU shown; see Figure 6-3 for NGPDU)

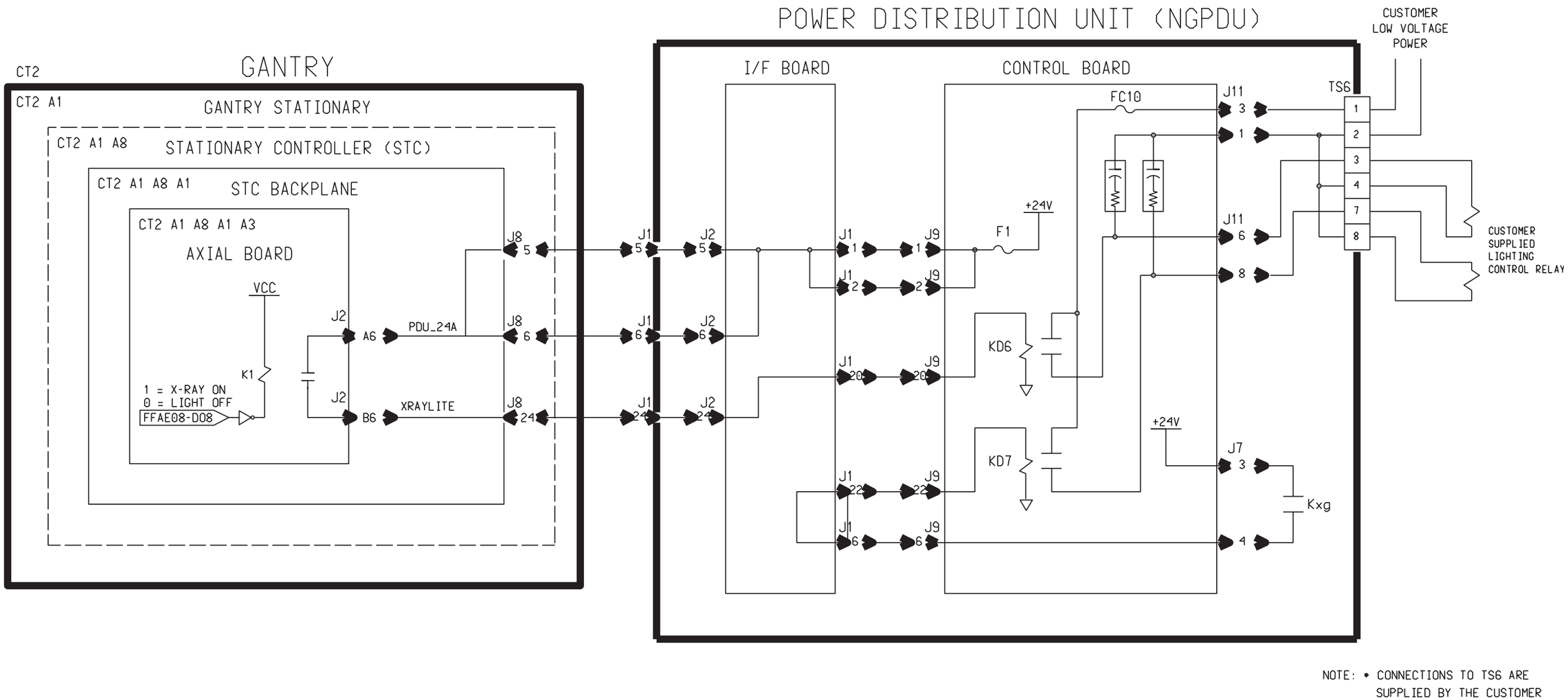

Figure 6-3 Site X-Ray ON Light (NGPDU shown; see Figure 6-2 for CPDU)

Section 3.0 — Site System ON Light

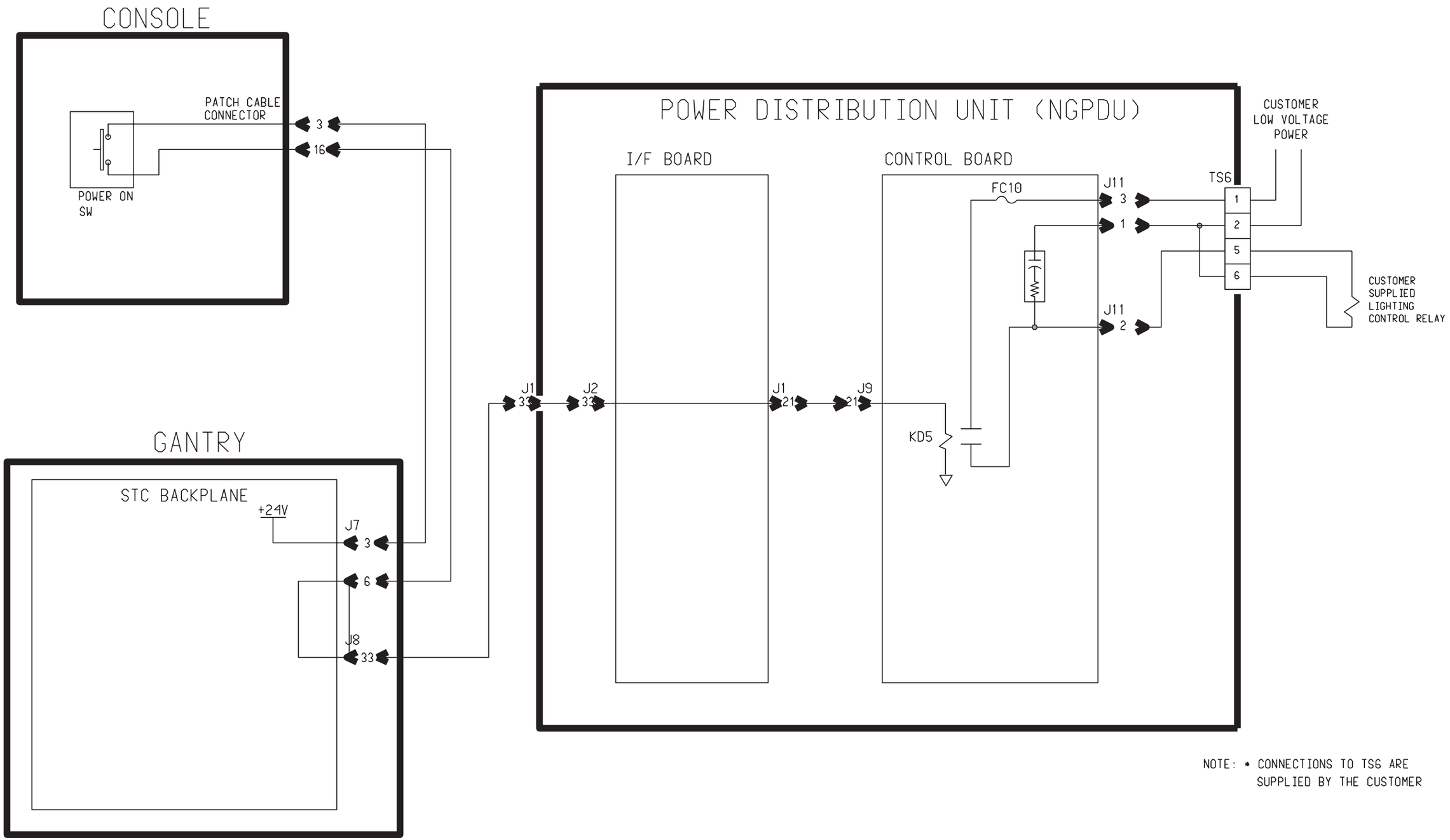

Figure 6-4 Site System ON Light (NGPDU shown)

Section 4.0 — RX Tilt & Gantry Console Reset - 2267765

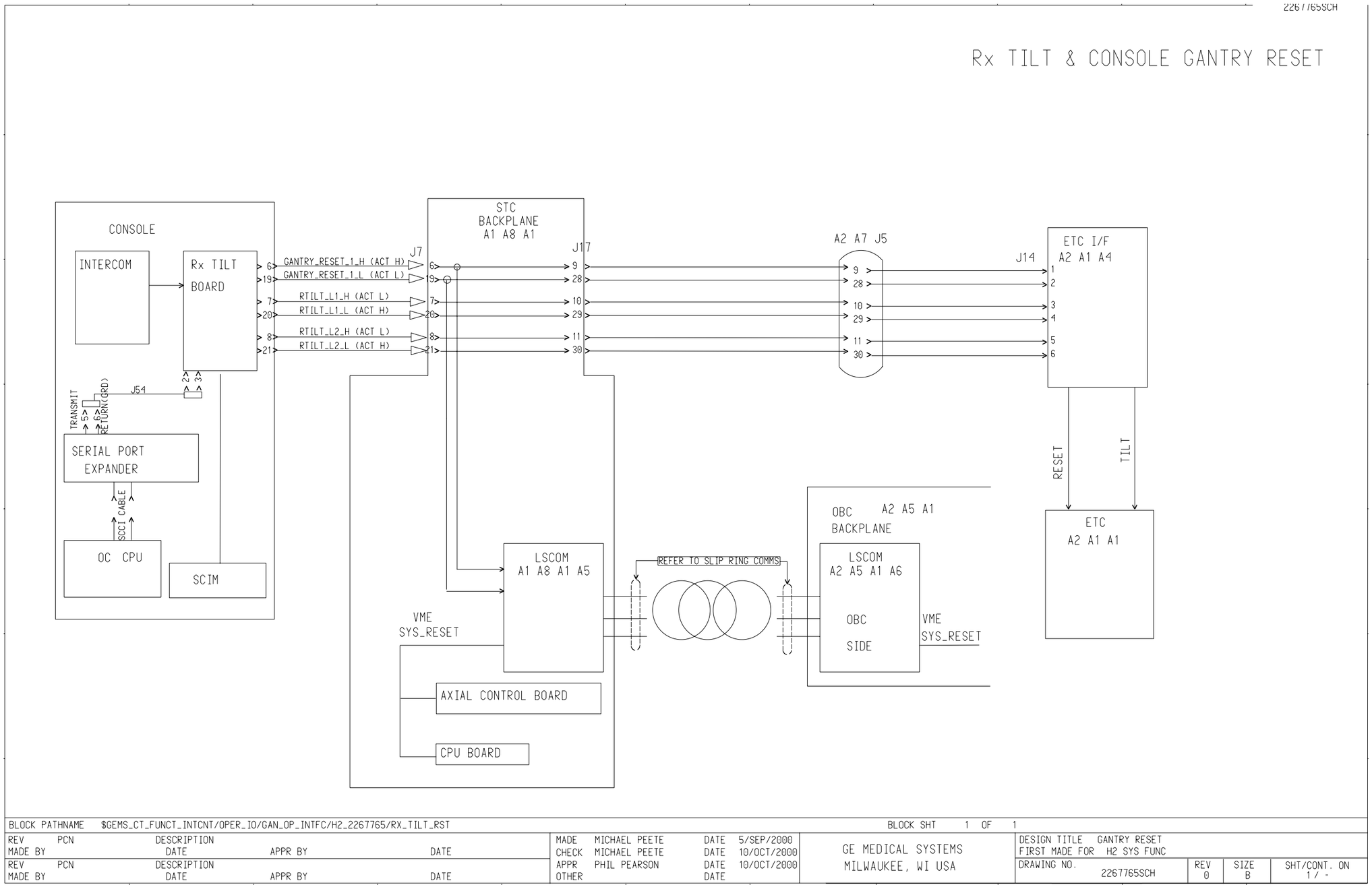

Figure 6-5 2267765 Sheet 1, Rev. 0

Chapter 7
System Monitoring

Section 1.0 — Mains Undervoltage - 2267731 (Not applicable to NGPDU)

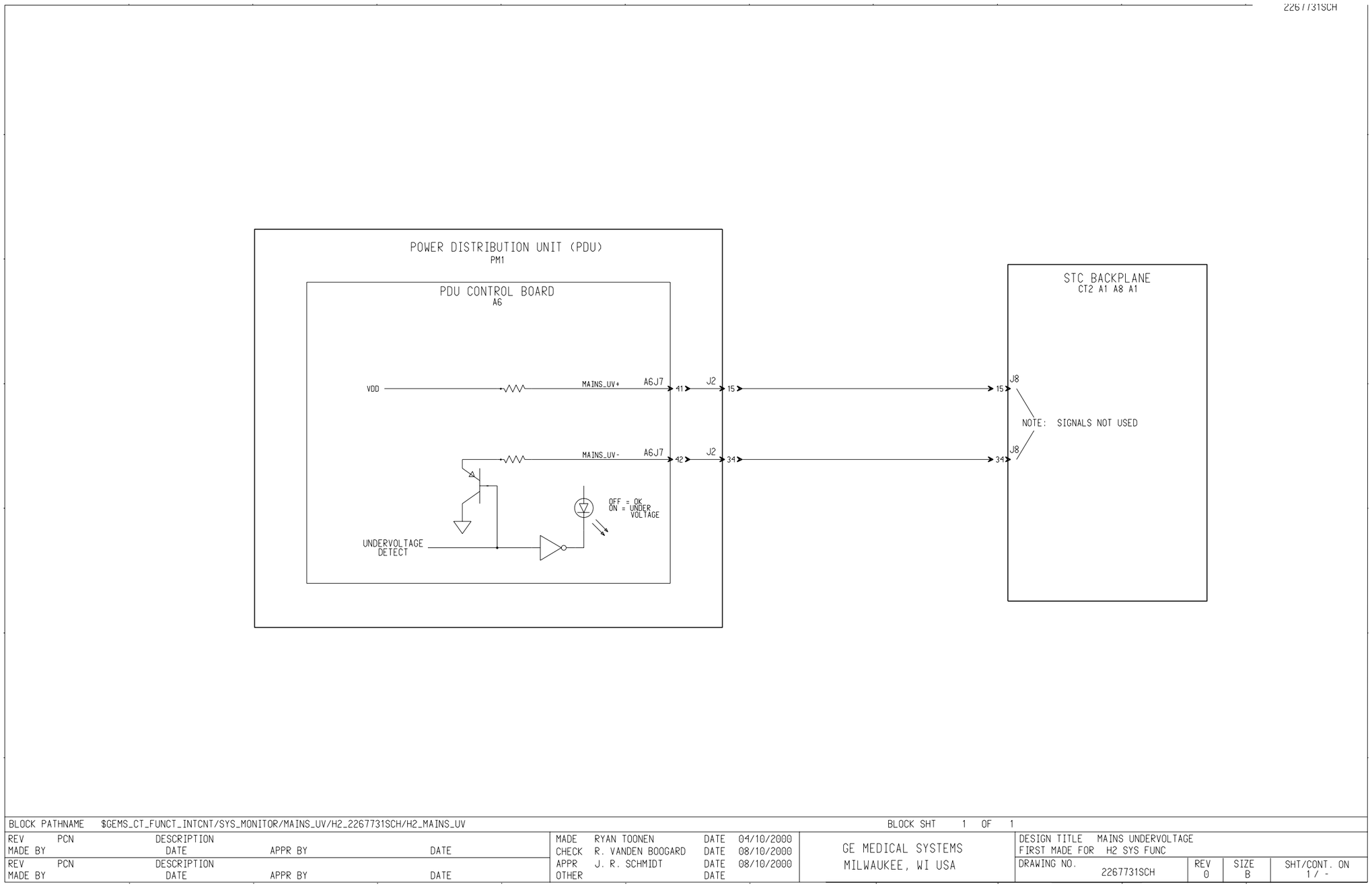

Figure 7-1 2267731 Sheet 1, Rev. 0

Section 2.0 — Gantry Temp. Sensors & Power Supply Monitors - 2267766

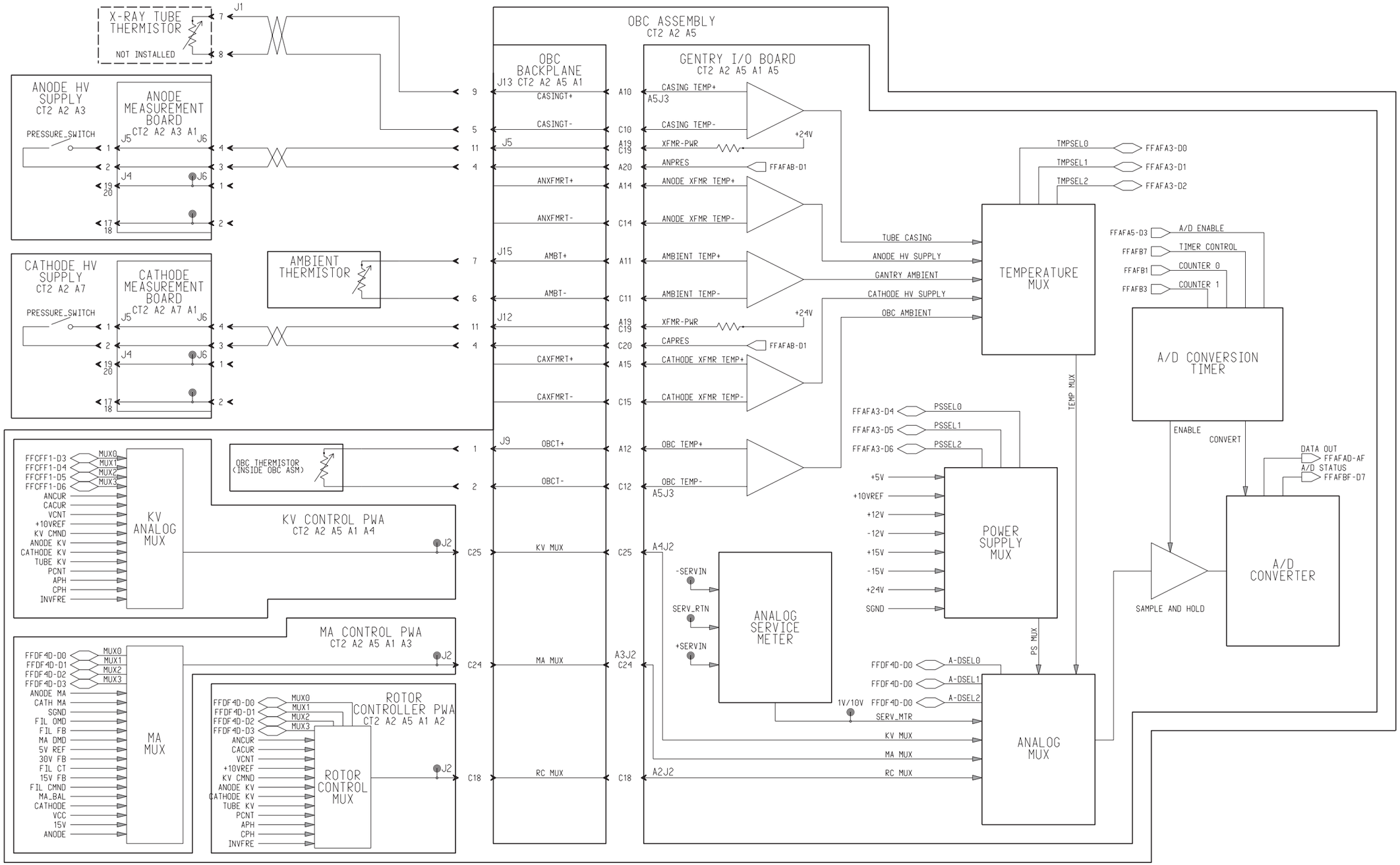

Figure 7-2 2267766 Sheet 1, Rev. 0

Chapter 8
System Power Control

Section 1.0 — HVDC Bus Control - 2267769

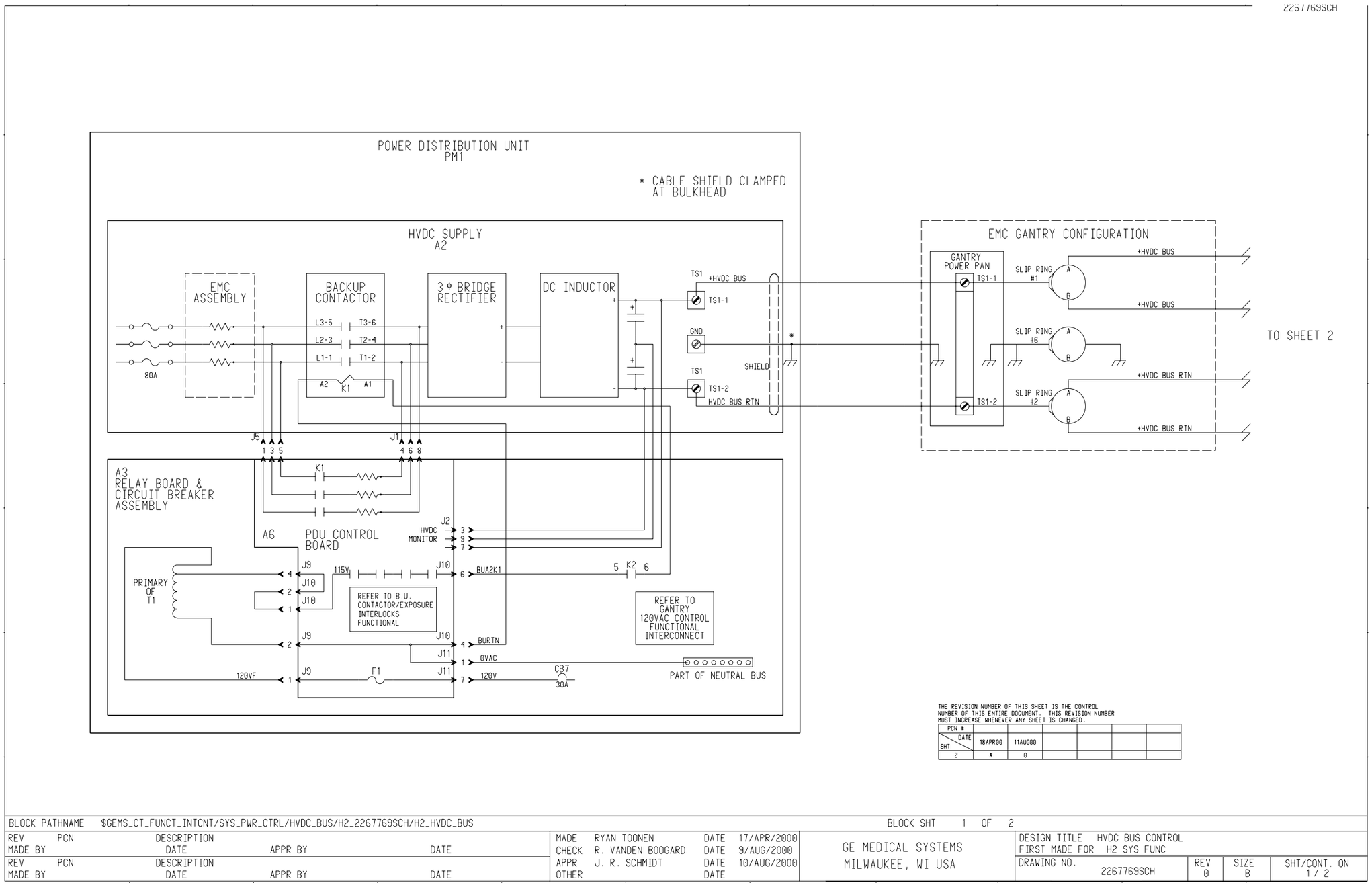

Figure 8-1 2267769 Sheet 1, Rev. 0 (CPDU shown; see Figure 8-2 for NGPDU)

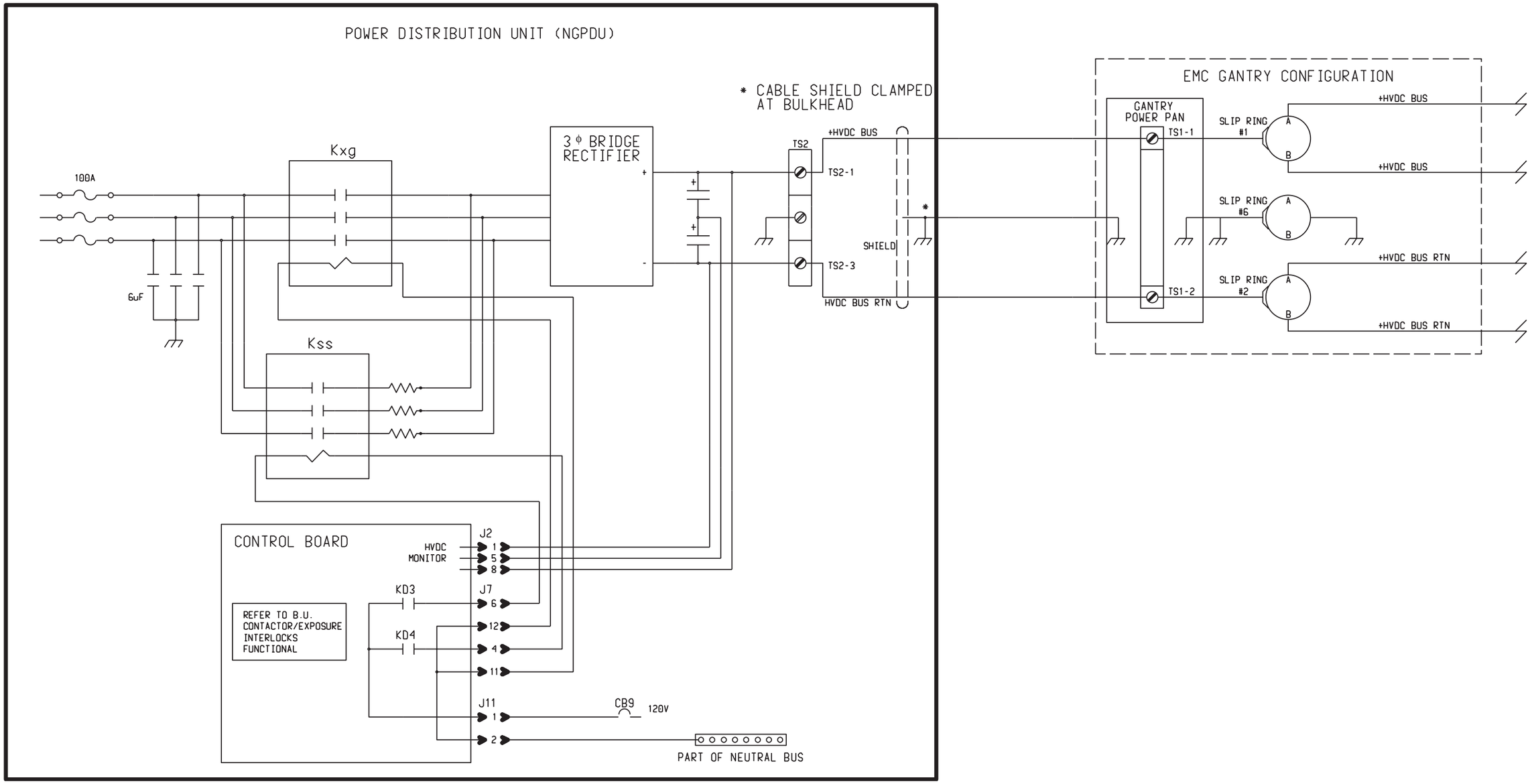

Figure 8-2 HVDC Bus Control (NGPDU shown; see Figure 8-1 for CPDU)

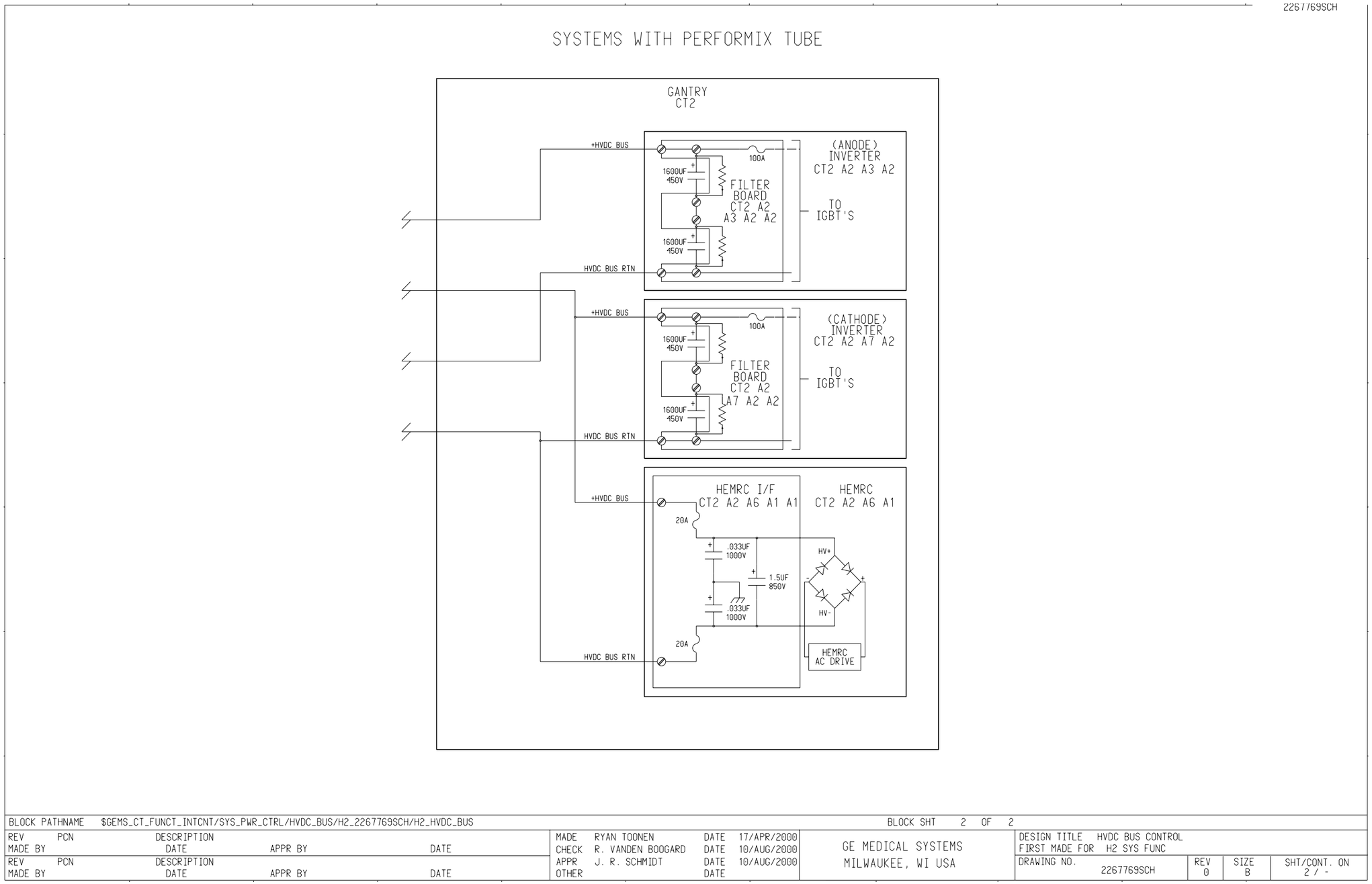

Figure 8-3 2267769 Sheet 2, Rev. 0

Section 2.0 — Gantry 120VAC Control - 2267770

See related Drawing Print for complete definition.

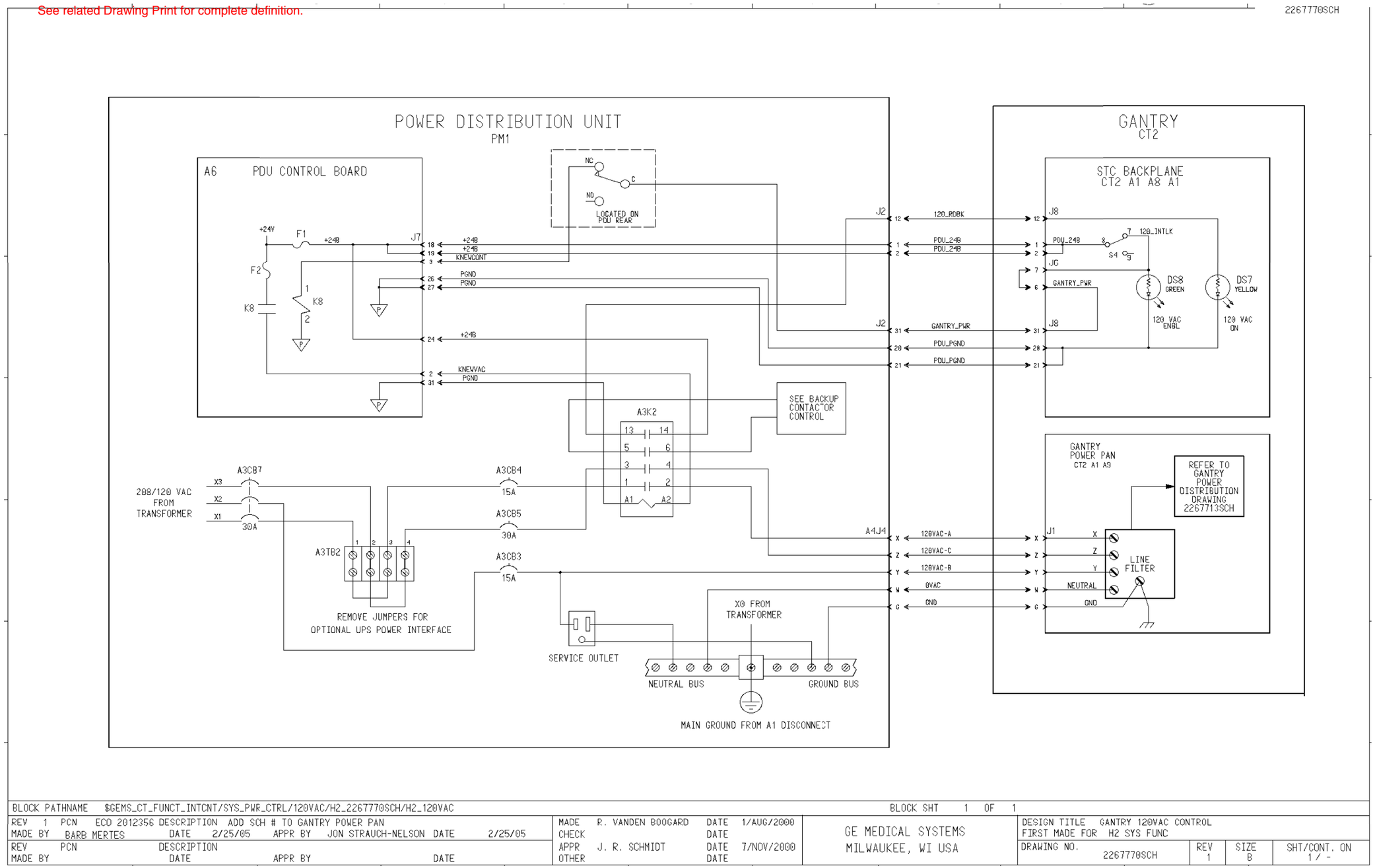

Figure 8-4 2267770 Sheet 1, Rev. 1 (CPDU shown; see Figure 8-5 for NGPDU)

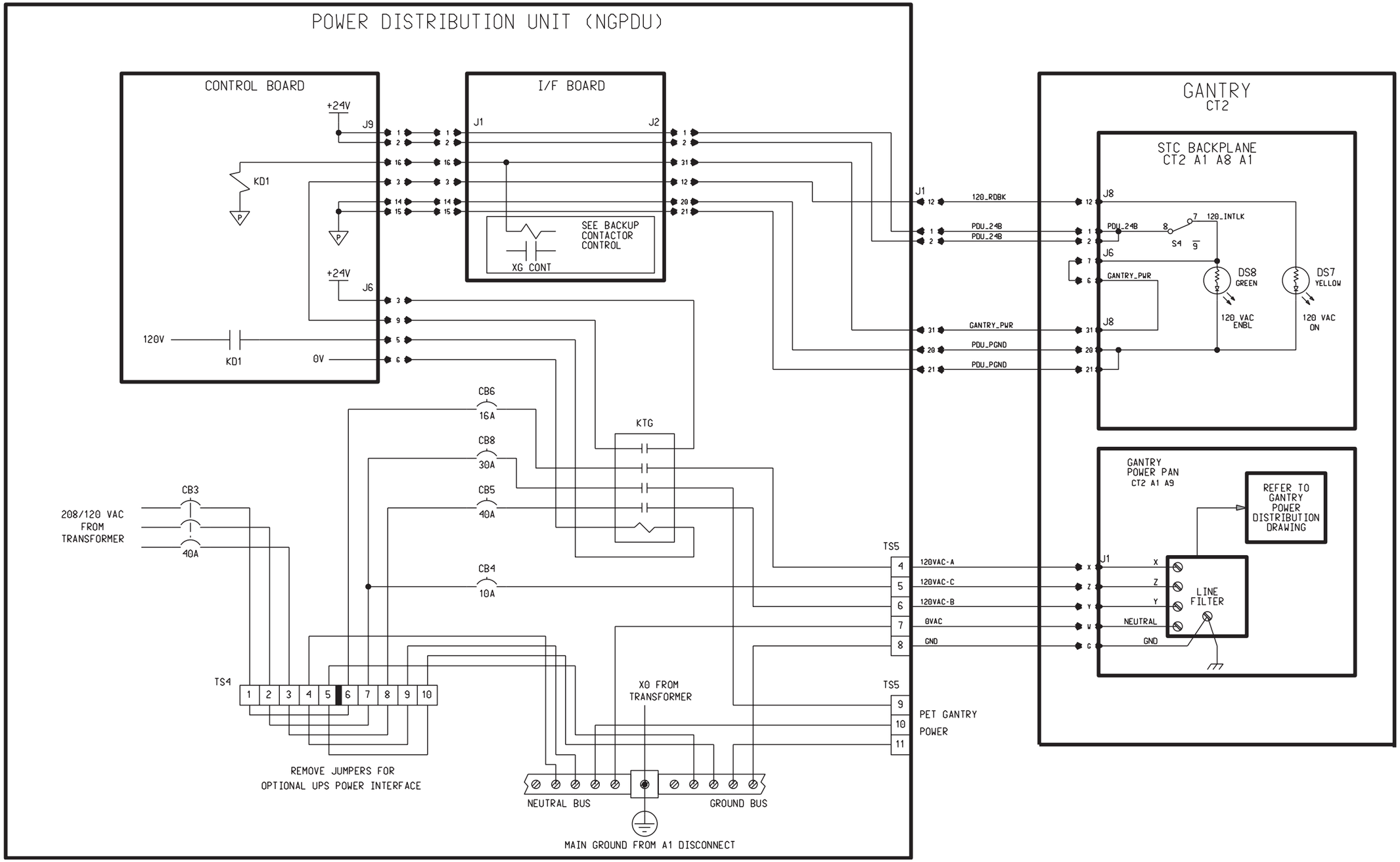

Figure 8-5 Gantry 120VAC Control (NGPDU shown; see Figure 8-4 for CPDU)

Section 3.0 — E-Stop Drives Reset - 2267773

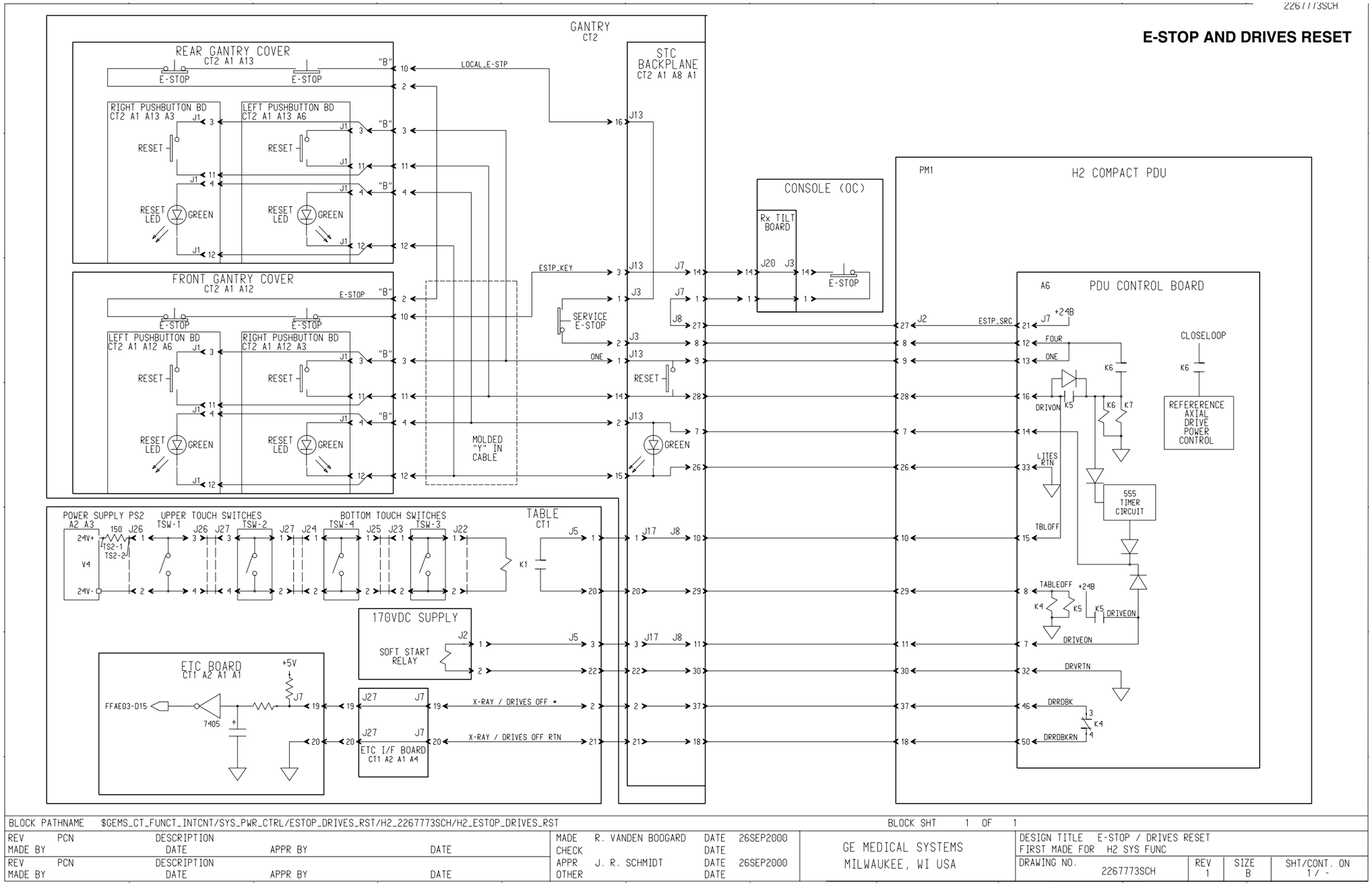

Figure 8-6 2267773 Sheet 1, Rev. 1 (CPDU shown; see Figure 8-7 for NGPDU)

E-STOP AND DRIVES RESET

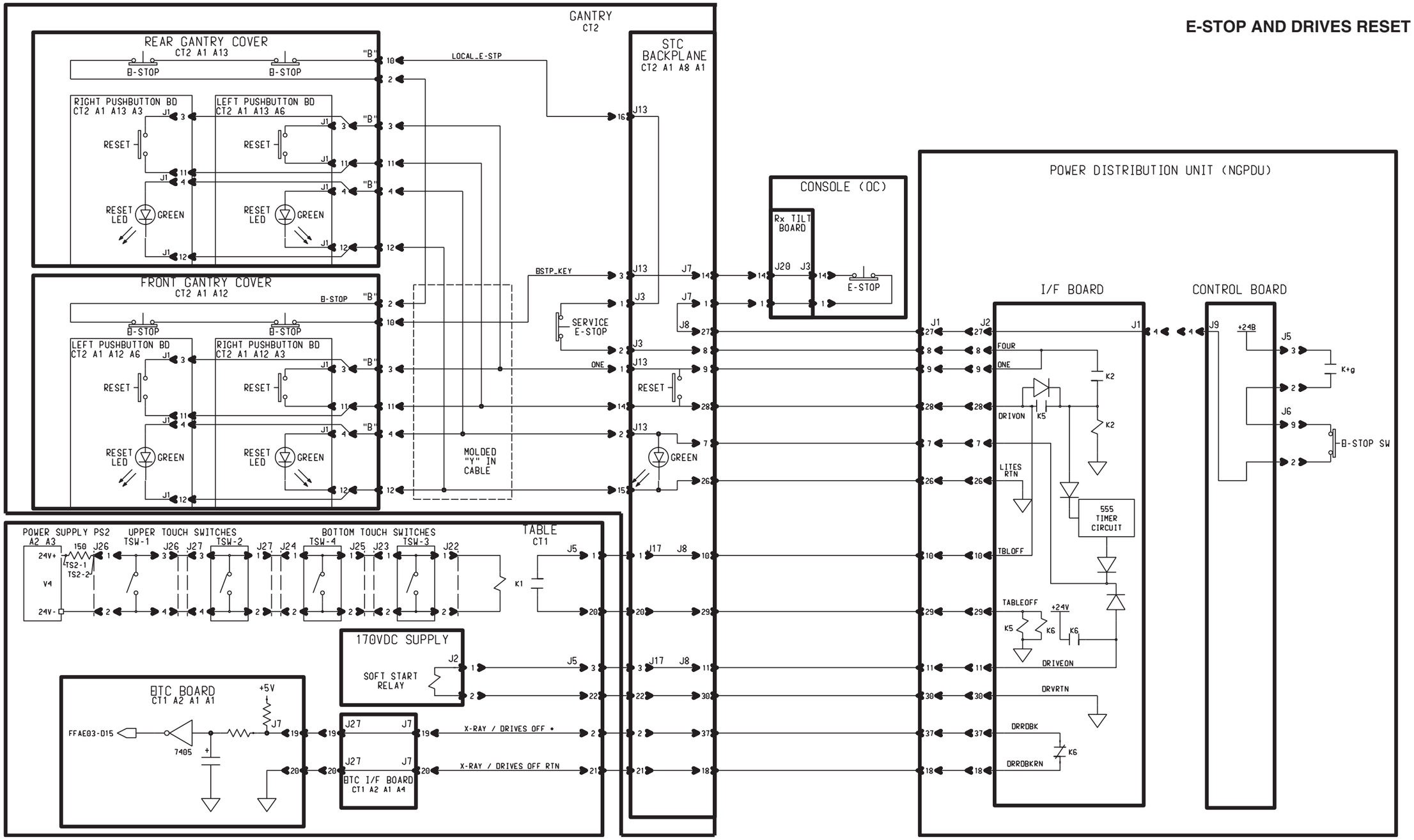

Figure 8-7 E-Stop Drives Reset (NGPDU shown; see Figure 8-6 for CPDU)

Section 4.0 — Gantry Stationary Power and Ground - 2267713

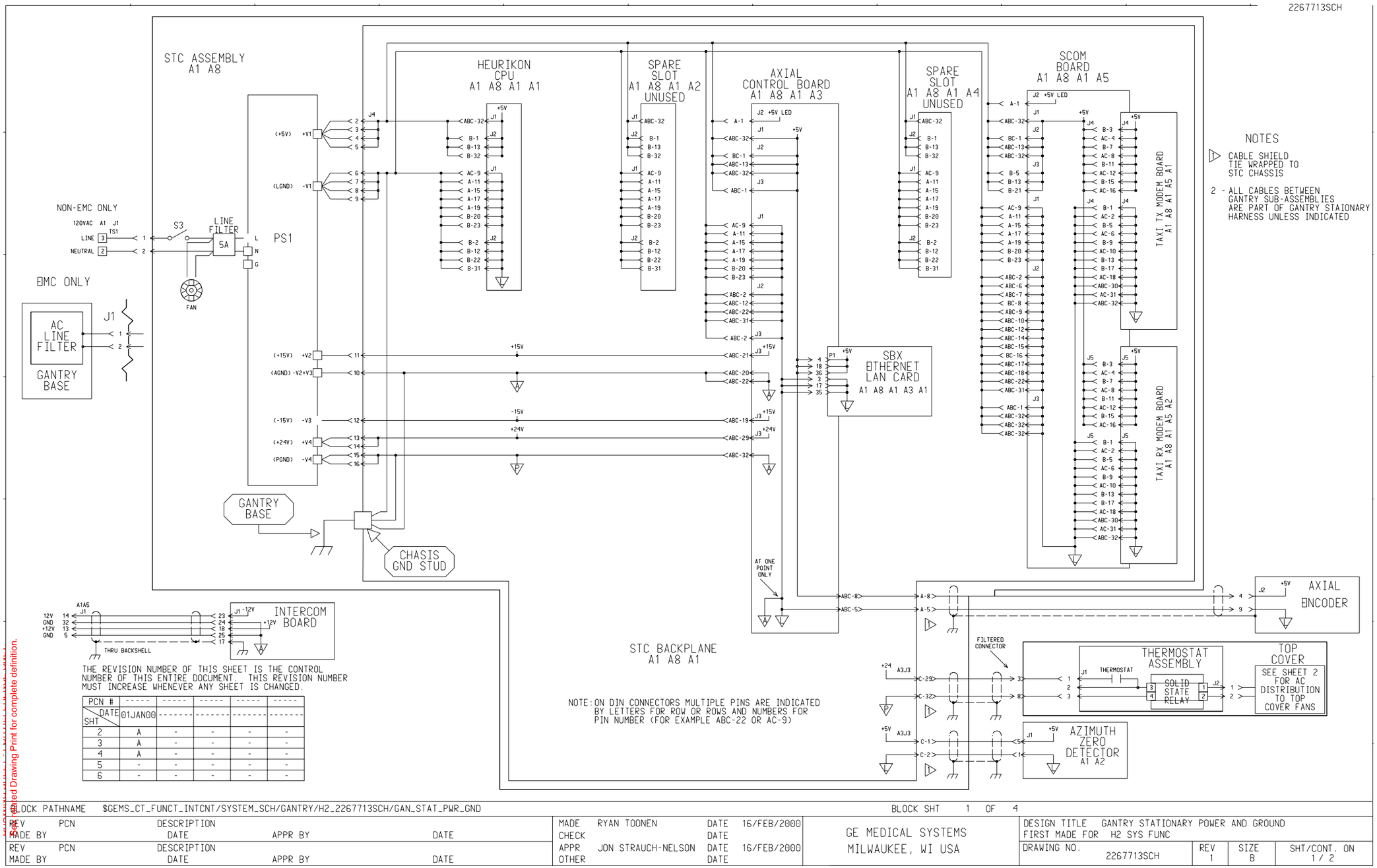

Related Drawing Print for complete definition.

Figure 8-8 2267713 Sheet 1, Rev. 1

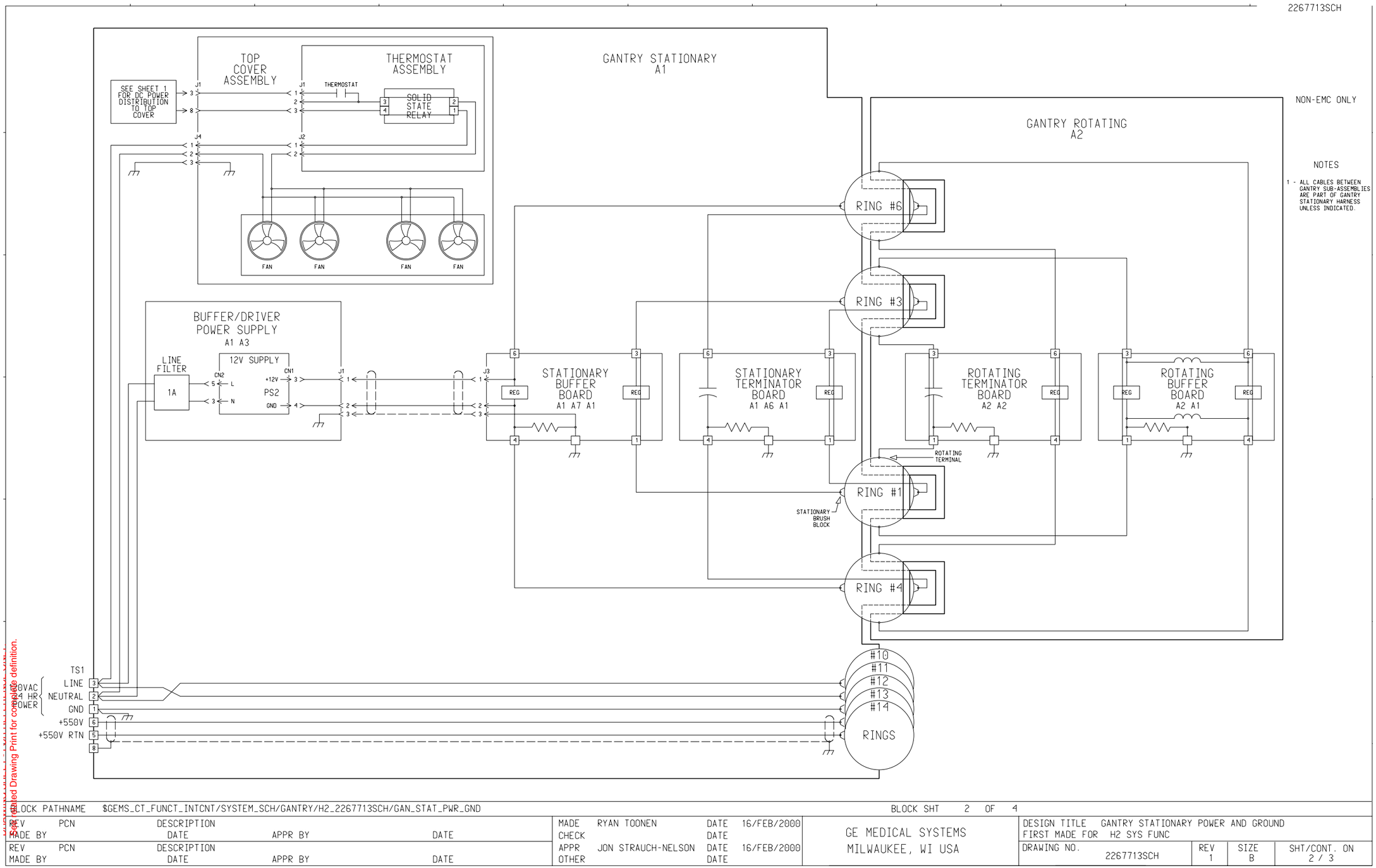

Figure 8-9 2267713 Sheet 2, Rev. 1

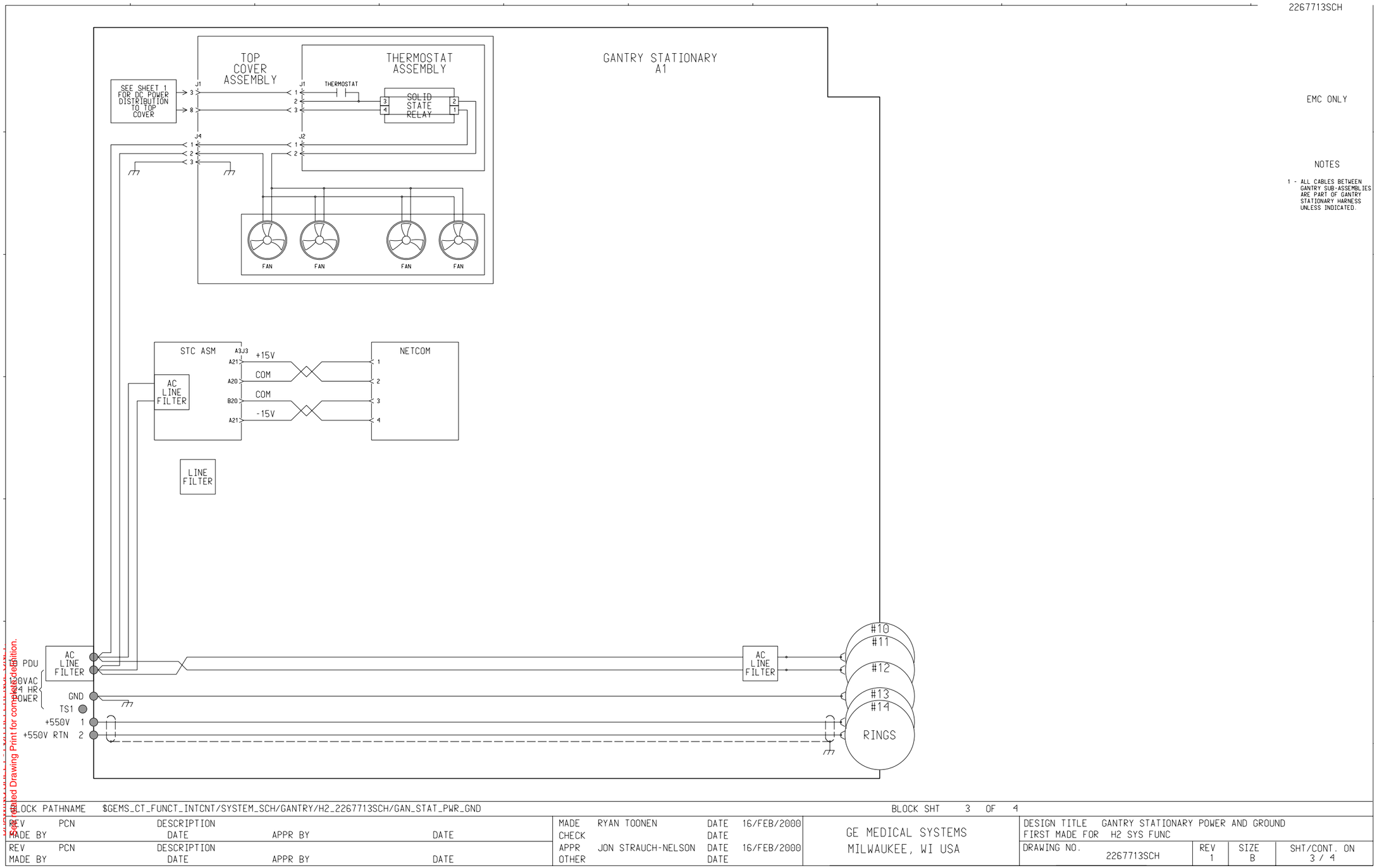

Unpublished Drawing Print for completed definition.

Figure 8-10 2267713 Sheet 3, Rev. 1

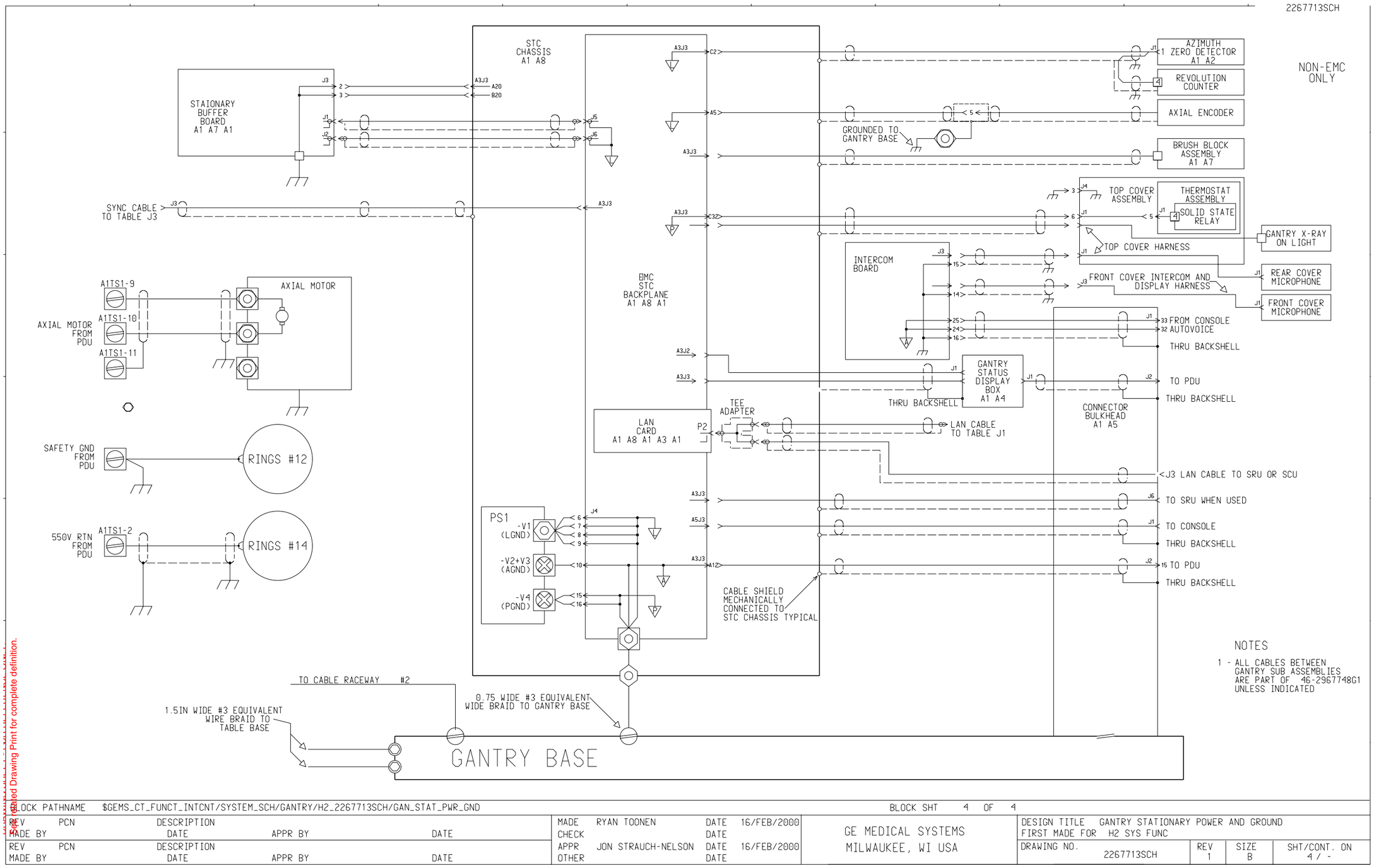

Refer to Controlled Drawing Print for complete definition.

Figure 8-11 2267713 Sheet 4, Rev. 1

Chapter 9
Image Generation (Global Console - Linux)

Section 1.0 — Scan Data Save

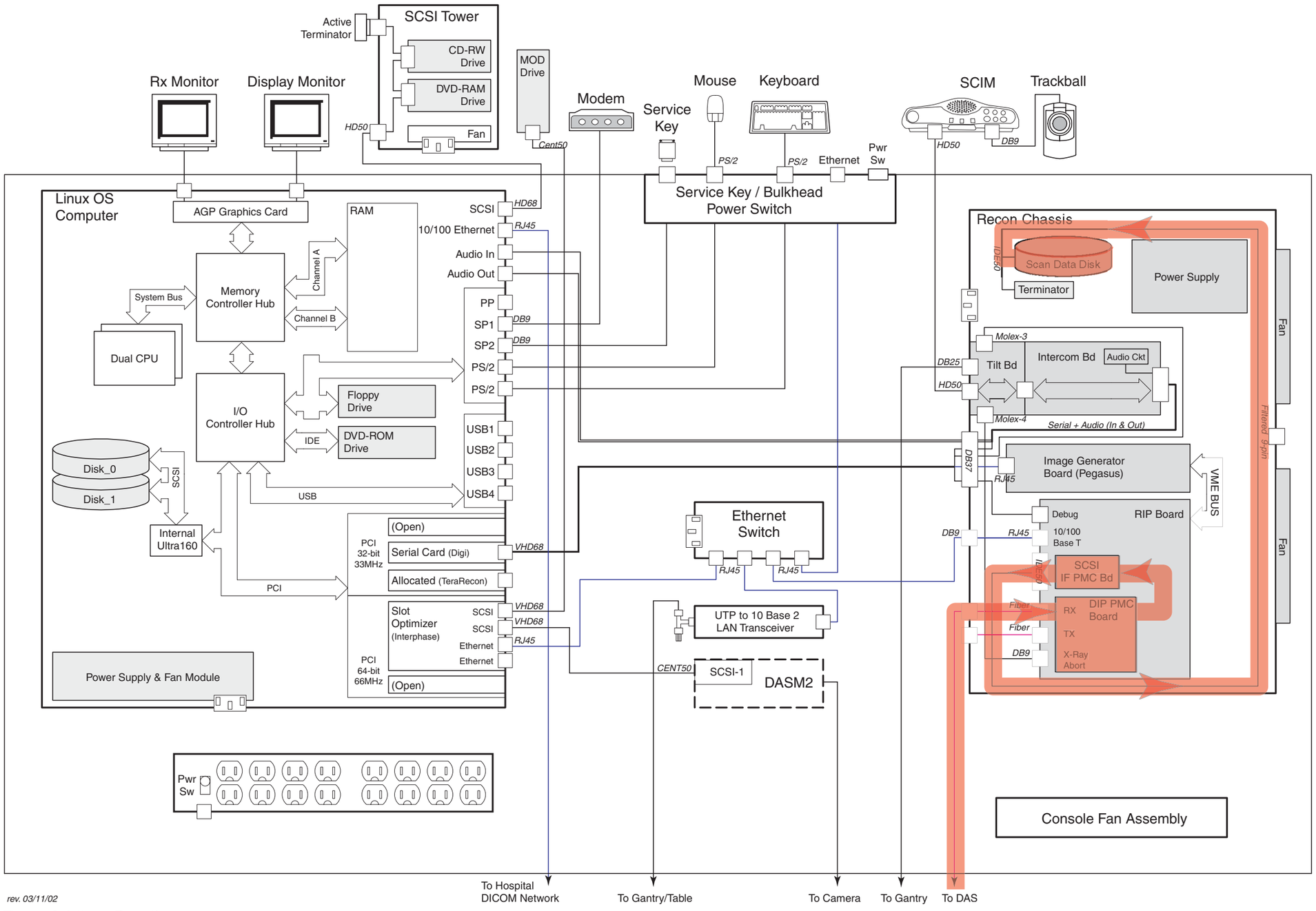

rev. 03/11/02

Figure 9-1 Scan Data Save

Section 2.0 — Data Restore

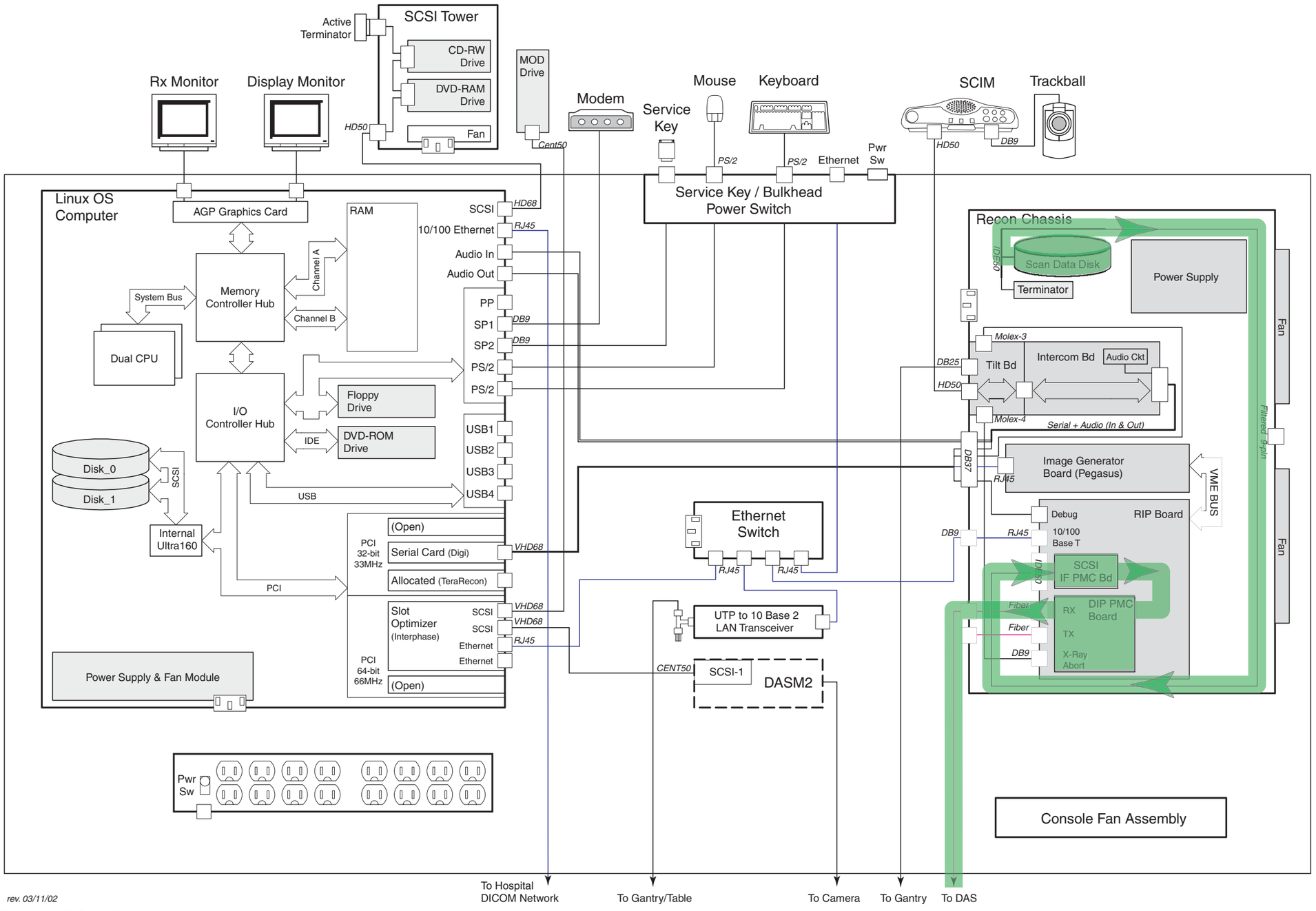

Figure 9-2 Data Restore

Section 3.0 — Pre-Processing, Filtered Back Projection & Post Processing

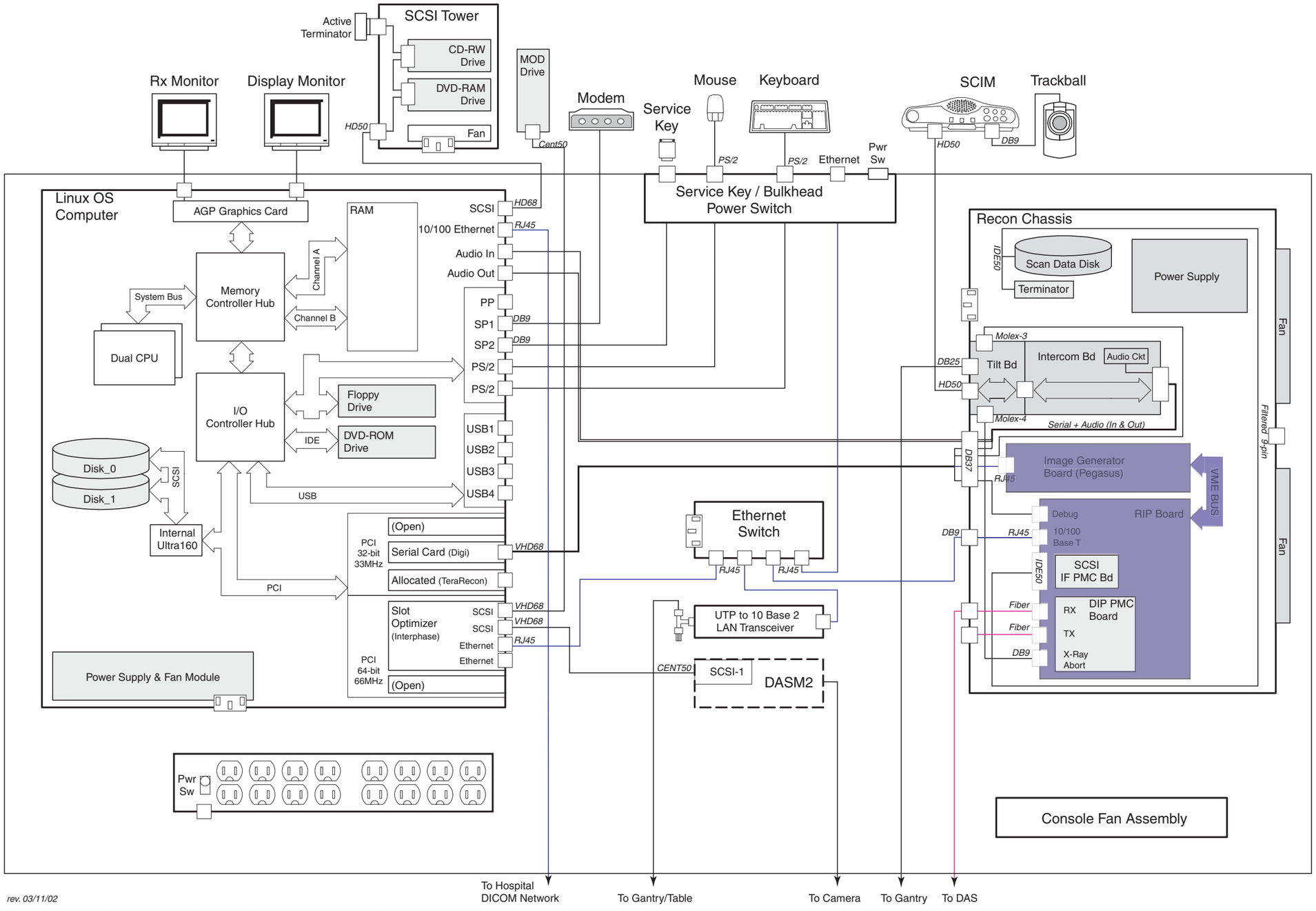

rev. 03/11/02

Figure 9-3 Pre-Processing, Filtered Back Projection & Post Processing

Section 4.0 — Image Transfer

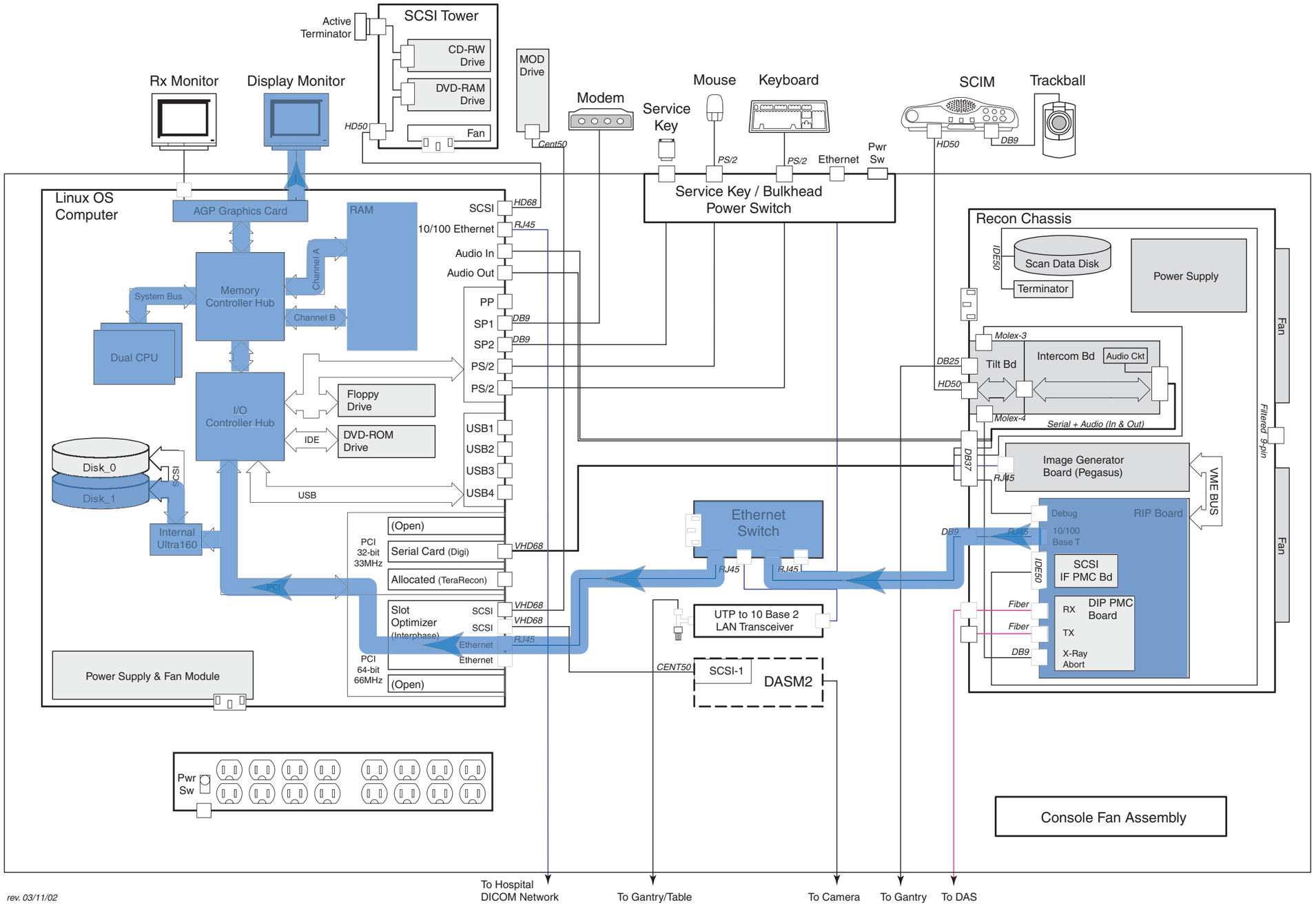

Figure 9-4 Image Transfer

Chapter 10
Image Generation (Global Console - Octane2)

Section 1.0 — Scan Data Save

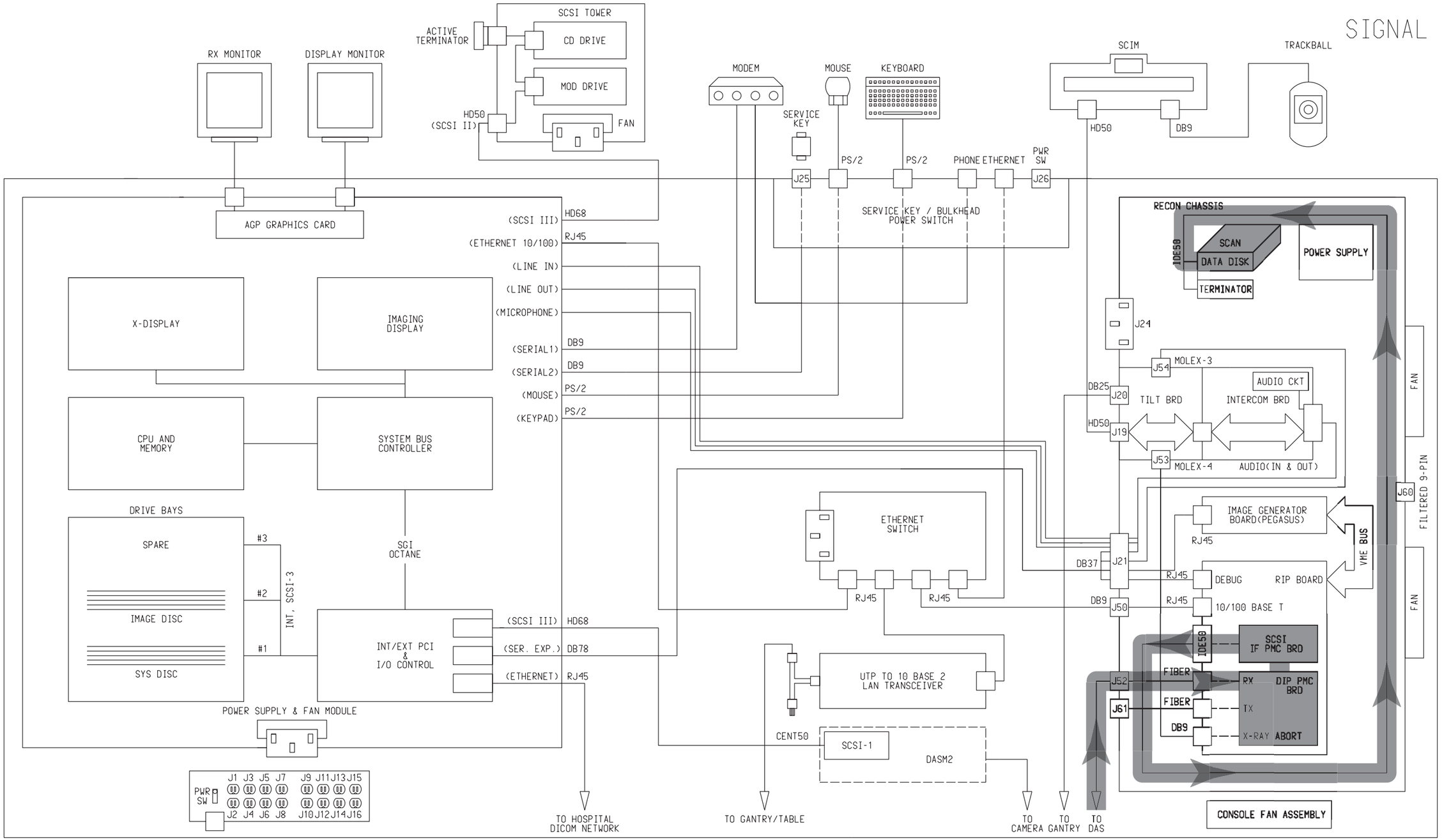

Figure 10-1 Scan Data Save

Section 2.0 — Data Restore

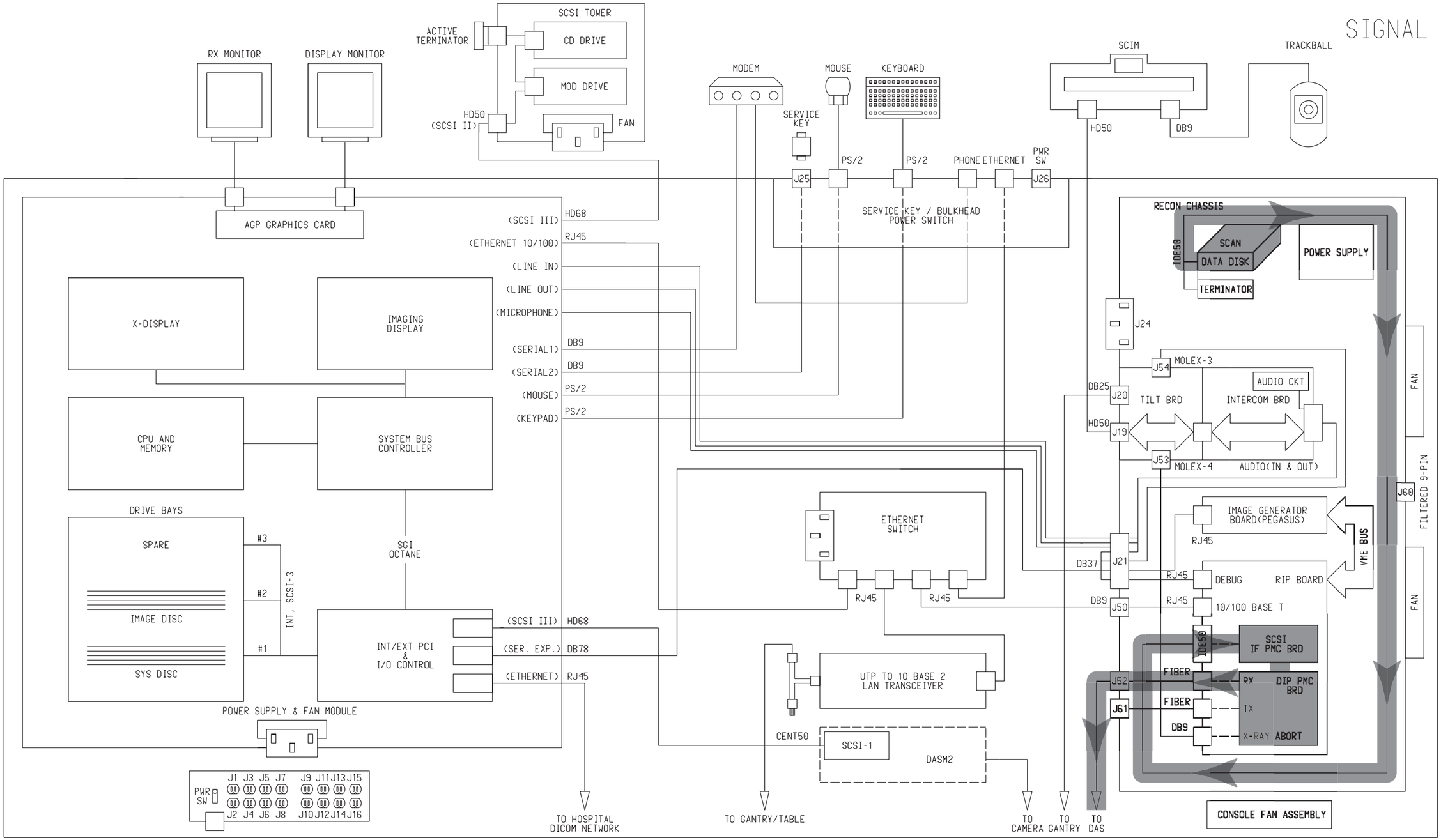

Figure 10-2 Data Restore

Section 3.0 — Pre-Processing, Filtered Back Projection & Post Processing

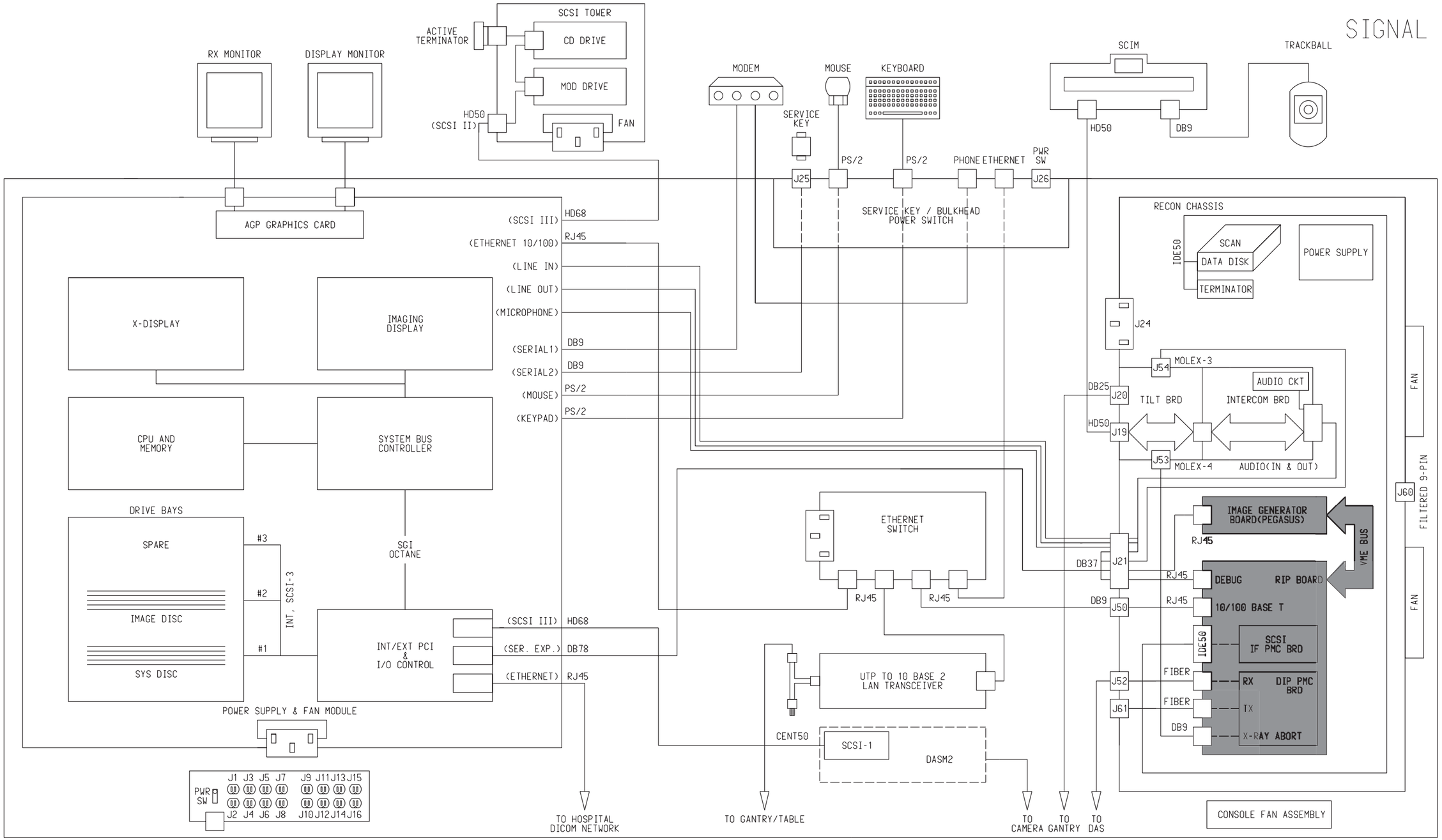

Figure 10-3 Pre-Processing, Filtered Back Projection & Post Processing

Section 4.0 — Image Transfer

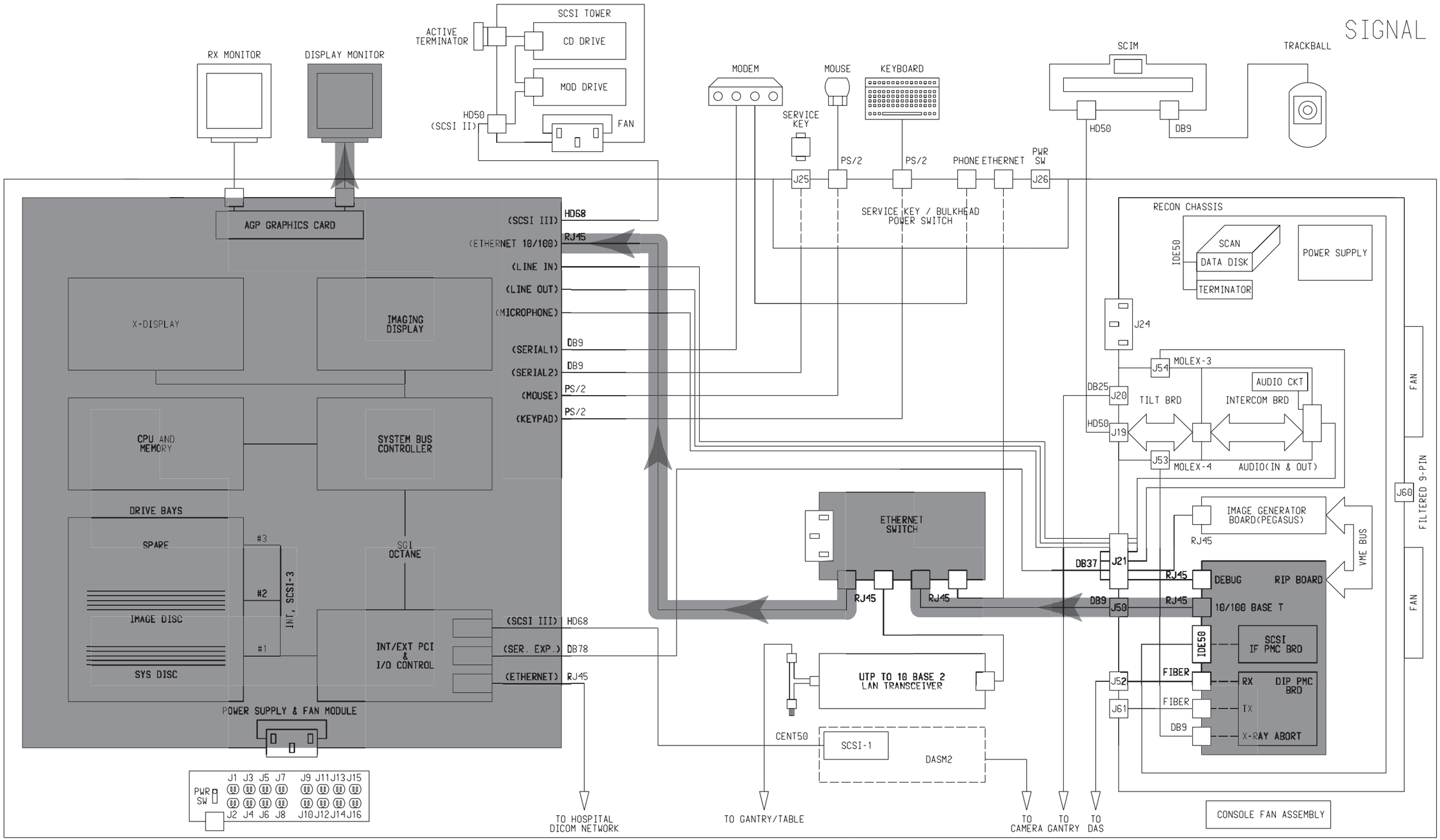

Figure 10-4 Image Transfer

Chapter 11
Image Generation (H3 Console)

Section 1.0 — Scan Data Save

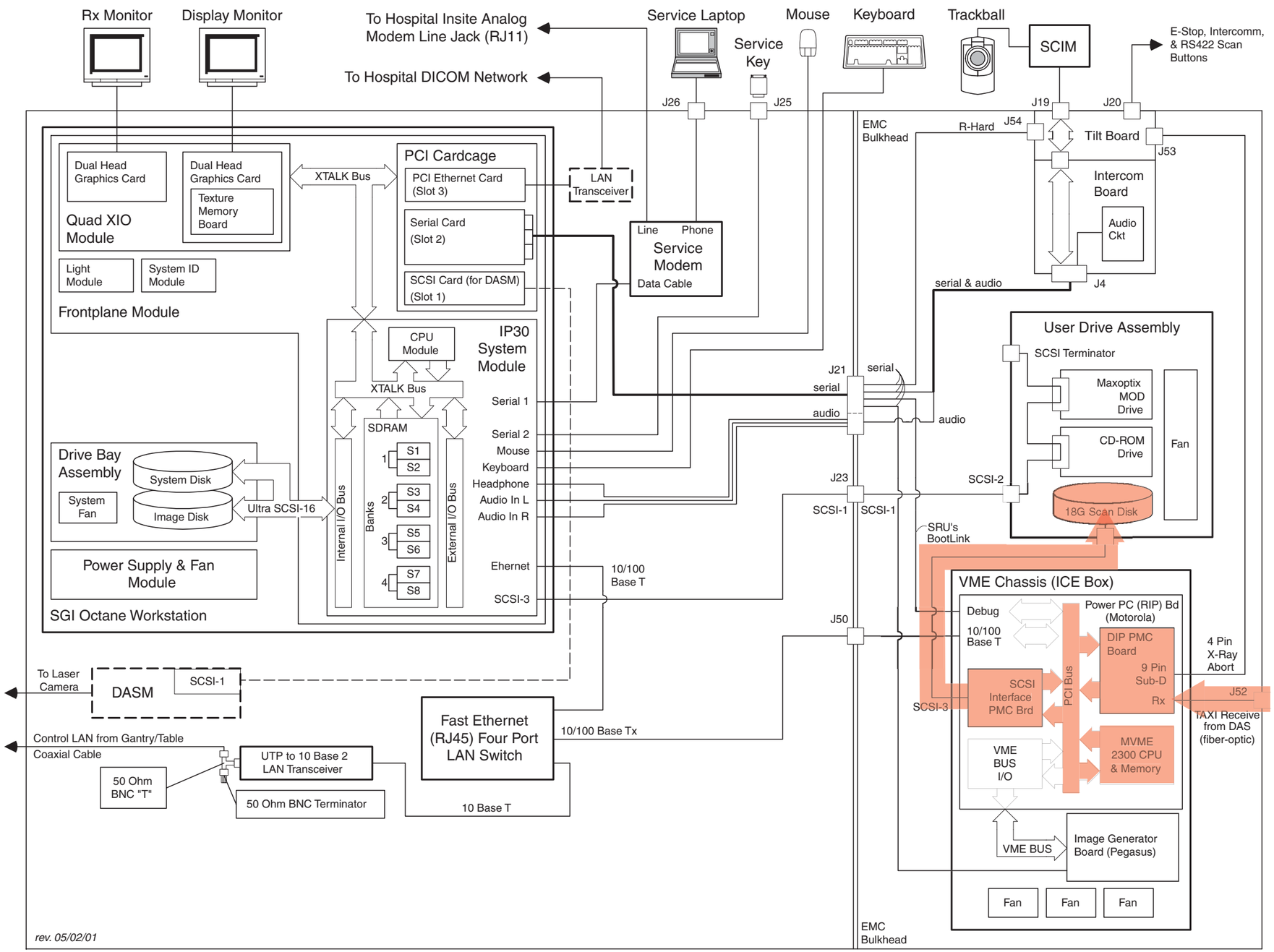

Figure 11-1 Scan Data Save

Section 2.0 — Data Restore

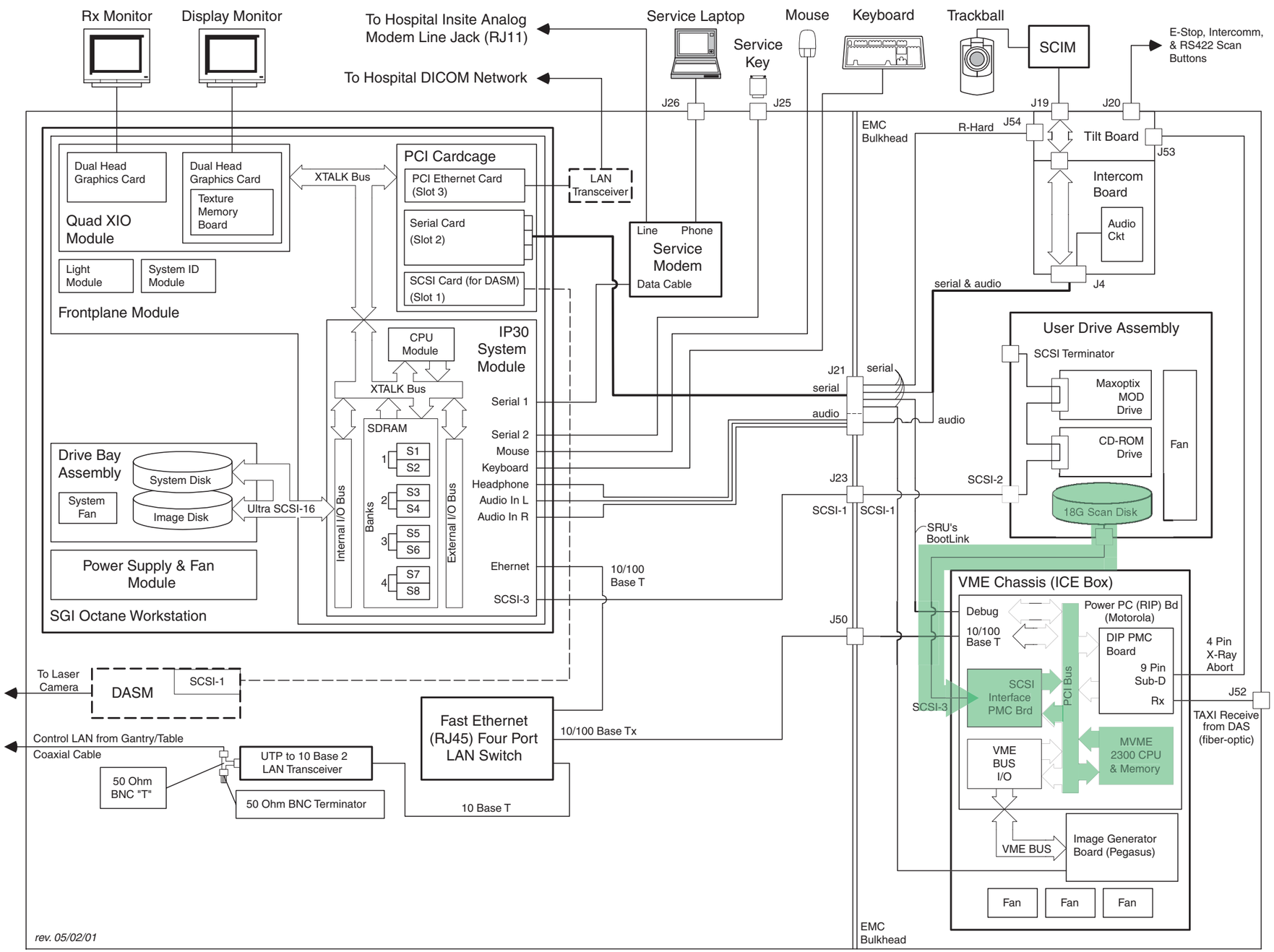

Figure 11-2 Data Restore

Section 3.0 — Pre-Processing, Filtered Back Projection & Post Processing

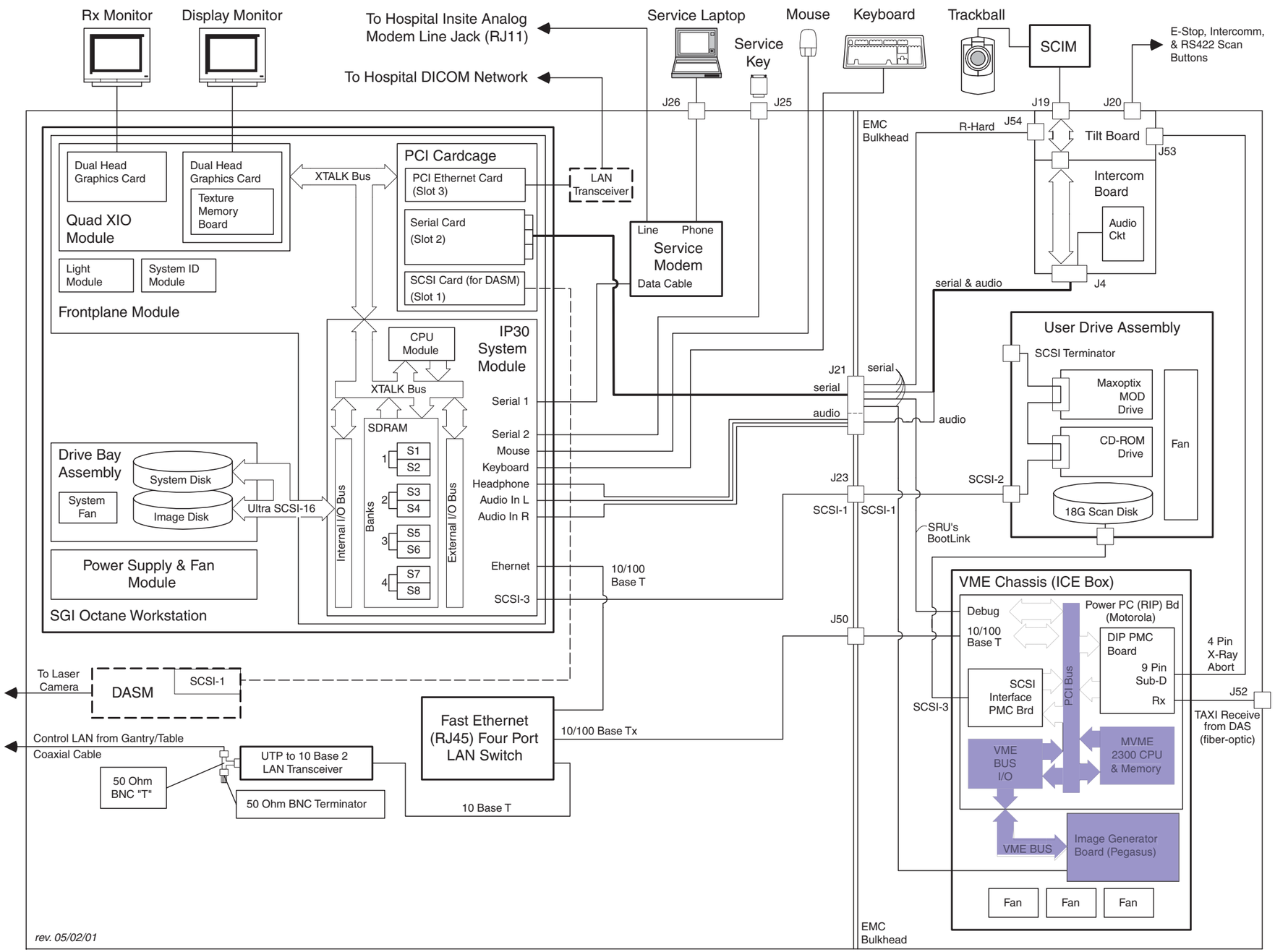

Figure 11-3 Pre-Processing, Filtered Back Projection & Post Processing

Section 4.0 — Image Transfer

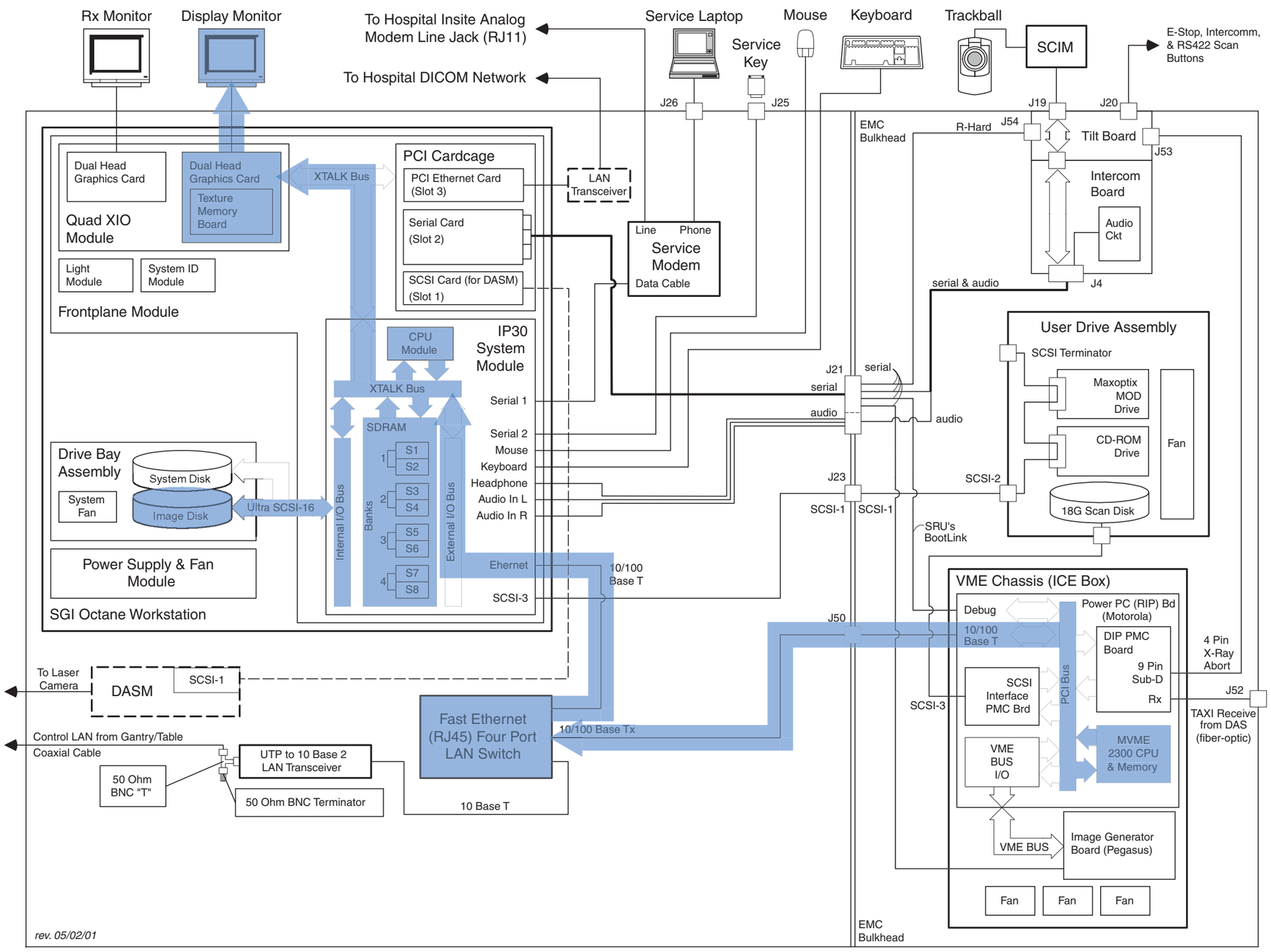

Figure 11-4 Image Transfer

GE MEDICAL SYSTEMS

GE MEDICAL SYSTEMS-AMERICAS: FAX 262.312.7434
3000 N. GRANDVIEW BLVD., WAUKESHA, WI 53188 U.S.A.

GE MEDICAL SYSTEMS-EUROPE: FAX 33.1.40.93.33.33
PARIS, FRANCE

GE MEDICAL SYSTEMS-ASIA: FAX 65.291.7006
SINGAPORE